Section 6

Parts Data

V-Series

Accessories

WCVD18KCS-10	**120 volts**	**60hz.**	**Single Phase**
WCVD18KCS-12	**208-240 volts**	**60hz.**	**Single Phase or Three Phase**
WCVD25KCS-12	**208-240 volts**	**60hz**	**Single Phase or Three Phase**
WCVD40KCS-12	**208-240 volts**	**60hz**	**Single Phase or Three Phase**
WCVD55KCS-12	**208-240-volts**	**60hz**	**Single Phase or Three Phase**
WCVD75KCS-12	**208-240 volts**	**60 hz**	**Single Phase or Three Phase**

Grip-O-Matic #1045 Puller to Remove Pulley and Bearing Housing from Shaft on 25lb and 40lb
9732-139-002 Kit, Door Gasket Expander (large)
9732-139-001 Kit, Door Gasket Expander (small)
9990-027-011 Hose, Water Supply (furnished 18lb.,25lb.,40lb.) 3/8" I.D. x 48" . 2
9990-027-013 Hose, Water Supply (furnished 55lb.,75lb.) 5/8" I.D. x 48" 2
8641-242-000 Washer, Inlet Hose (furnished) 2
9565-003-001 Strainer, Inlet Hose (furnished) 2
9242-417-002 Drain hose 10 ft. length x 2-1/4" I.D. .....
9242-417-003 Drain hose 10ft. length x 3" I.D. .....
8641-586-002 Bevel Washer for 5/8" bolt used in installations using angle iron bases
8641-586-003 Bevel Washer for 3/4" bolt used in installations using angle iron bases
8538-151-001 Sealing compound .....
8545-051-002 TORX#20 .....
8545-051-003 Special Tool For Removing Coin Acceptor Mounting Screws. (T-10 Torx)
9475-002-002 Flow Restrictors (in dispenser) 2
8612-001-001 Battery (used on Control PCB) 1
8545-056-001 Special Tool for adjusting spacing between outer tub front and cylinder front on WCVD-55 ,WCVD-75
9183-036-001 VFD Filter options 75-55-40 lb .....
9183-033-001 VFD Filter options 75-55-40 lb .....
Snap On #CJ-84-C Puller for pushing cylinder out of bearings must be purchase from local sources.
Vise Grip #11R Clamps to hold tub front to outer tub when installing tub front WCVD-55,WCVD-75
9504-010-001 Coin OP CD for OS2 platform for infared programming devices

CABINET AND FRONT PANEL GROUP

Key	Part Number	Description	
1	9454-656-001	Panel, Side (Left or Right) - stainless WCVD-25	2
1	9454-672-001	Panel, Side (Left or Right)-stainless WCVD-55	4
1	9454-635-005	Panel, Right Side-stainless WCVD-18	1
1	9454-635-006	Panel, Left Side - stainless WCVD-18	1
1	9989-449-001	Panel, Side (Left or Right)-stainless WCDV-40	2
1	9454-760-001	Panel, Side (Left or Right)-stainless WCVD-75	4
2	9545-018-013	Screw, (Side Panel to Base) WCVD-25	6
2	9545-018-013	Screw, (Side Panel to Base) WCVD-40 & 55 & 75	8
2	9545-018-018	Screw, (Side Panel to Base) WCVD-18	6
2	8640-414-006	Nut, Hex 1/4-20 UNC WCVD-18 & 25	6
2	8640-414-006	Nut, Hex 1/4-20 UNC WCVD-40 & 55 & 75	8
3	9029-066-001	Bracket, Side Panel WCVD-18 & 25 & 40	1
*	8640-413-002	Nut, Hex WCVD-18 & 25 & 40	2
*	9545-008-031	Screw WCVD-18 & 25 & 40	2
4	9454-659-001	Panel Assy, Front WCVD-25	1
4	9454-671-001	Panel Assy, Front WCVD-55	1
4	9454-763-001	Panel Assy, Front WCVD-75	1
4	9454-728-001	Panel Assy, Front WCVD-18	1
4	9454-669-001	Panel Assy, Front WCVD-40	1
5	9059-063-002	Band, Edge ProtectorWCVD-25 & 40 & 55 & 75	1
5	9059-063-004	Band, Edge Protector WCVD-18	1
*	9051-053-001	Bumper Loading Door WCVD-75	1
*	9545-008-024	Screw, Hex- To Control Panel	2
*	8640-399-005	Nut, Spring- To Control Panel 10/32	2
6	9545-008-014	Screw, Flat Head- Front to Sides	2
6	8641-585-001	Washer, Finish	2
*	8640-399-008	Nut, Spring- To Front Panel	2
*	9545-008-023	Screw, Guide	2
7	8502-624-002	Label, Door Opening	1
8	9989-474-001	Panel, Control (Mounts Nameplate) WCVD-25,	1
8	9989-476-001	Panel, Control (Mounts Nameplate) WCVD-55, WCVD-75	1
8	9989-473-001	Panel, Control (Mounts Nameplate) WCVD-18	1
8	9989-475-001	Panel, Ccontrol (Mounts Nameplate) WCVD-40	1
*	9545-008-026	Screw, Control Panel to Sides	4
9	9412-113-001	Nameplate Decal, Control Panel (one piece) WCVD-25	1
9	9412-112-001	Nameplate Decal, Control Panel (one piece) WCVD-18	1
9	9412-114-001	Nameplate Decal, Control Panel (one piece) WCVD-40	1
9	9412-115-001	Nameplate Decal, Control Panel (one piece) WCVD-55	1
9	9412-130-001	Nameplate Decal, Control Panel (one piece) WCVD-75	1
10	9454-761-001	Panel Top Front WCVD-75	1
10	9454-762-001	Panel Top Rear WCVD-75	1
10	9454-736-001	Panel Top WCVD-55	1
10	9454-733-001	Panel Top WCVD-18	1
10	9454-735-001	Panel Top WCVD-40	1
10	9454-734-001	Panel, Top WCVD-25	1
11	8650-012-003	Lock, Top (w/Key) WCVD-18,WCVD-25,WCVD-40	1
11	8650-012-003	Lock, Top (w/key) WCVD-55, WCVD-75	2

CABINET AND FRONT PANEL GROUP CON'T

Key	Part Number	Description	
*	6292-006-007	Key, Top- # 6324	1
*	9095-038-001	Cam, Lock-Top	1
*	8640-426-001	Nut, 9/32	1
*	8641-581-008	Washer	1
12	9108-096-001	Door, Lower Service WCVD-18	1
12	9108-099-001	Door, Lower Service WCVD-55,WCVD-75	1
*	9108-097-001	Door, Lower Service WCVD-40	1
12	9108-097-001	Door, Lower Service WCVD-25	1
13	9244-081-001	Handle (bumper guard) WCVD-18	1
13	9244-081-002	Handle (bumper guard) WCVD-40, WCVD-25	1
13	9244-081-003	Handle (bumper guard) WCVD-55,WCVD-75	1
*	9545-045-010	Screw	4
*	9545-008-023	Screw, Guide	2
14	9545-008-014	Screw Mtg., Flat Head	2
14	8641-585-001	Washer, Finish	2
*	8640-399-008	Nut, Spring	2
15	9108-095-005	Door, Dispenser WCVD-18,WCVD-25,WCVD-40,WCVD-55	1
*	9451-191-001	Pin, PlainWCVD-18,WCVD-25,WCVD-40,WCVD-55	2
*	9467-025-001	Post, Door MountingWCVD-18,WCVD-25,WCVD-40,WCVD-55	2
*	9545-045-002	Screw, Disp.Post MtgWCVD-18,WCVD-25,WCVD-40,WCVD-55	4
*	9545-008-012	Screw, Disp. Mtg. WCVD-18,WCVD-25,WCVD-40,WCVD-55	4
*	8640-399-007	Nuts, SpringWCVD-18,WCVD-25,WCVD-40,WCVD-55	4
*	9086-017-001	Catch, Top Panel	2
22	9467-024-001	Post, Top Locator	2
*	8640-411-003	Nut, Keps	2
23	9355-001-001	Locator, Panel	2
24	9545-008-025	Screw, #10	2
16	9732-122-001	SS cover Box Assy, Coin (See Coin Handling Group)	1
17	9021-001-001	Acceptor, Coin ($.25) (See Coin Handling Group)	1
18	9456-041-007	Plastic Plug 1 1/2"-(inside cylinder) WCVD-18,WCVD-25,WCVD-40	1
20	9539-461-007	Switch Coin Blocking Safety	1
21	9950-060-001	Masking Ring with saftey switch opening WCVD25,40,55	1
21	9950-059-001	Masking ring with saftey switch opening WCVD-18	1
21	9950-060-002	Masking Ring with saftey switch opening WCVD-75	1

* Not Illustrated

9
10
11
20 & 2 behind
front panel
2
75 lb. Washer

10
11
17
1
4

15
FABRIC SOFTENER
DETERGENT
BLEACH

23
24
22

11
10
9
17
4
5
1
3 & 4
mounted here
18
13
14
2
12

10
17
9
7
5
4
13
14
18
12

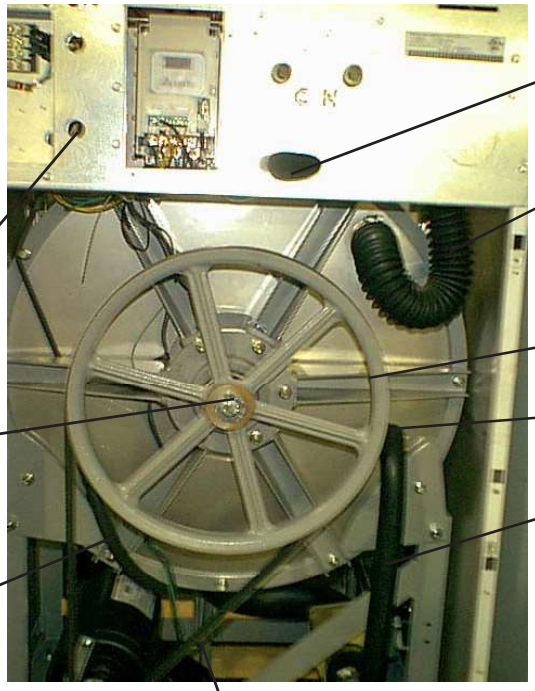
12 & 13
16
15
5
6
&
7
12
11
14
3

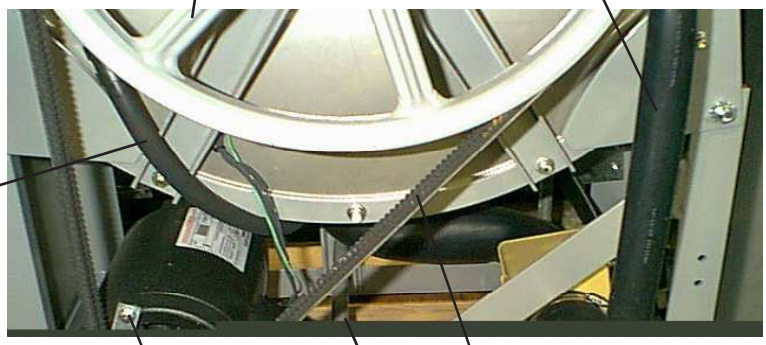
5
11
14
17
2
8

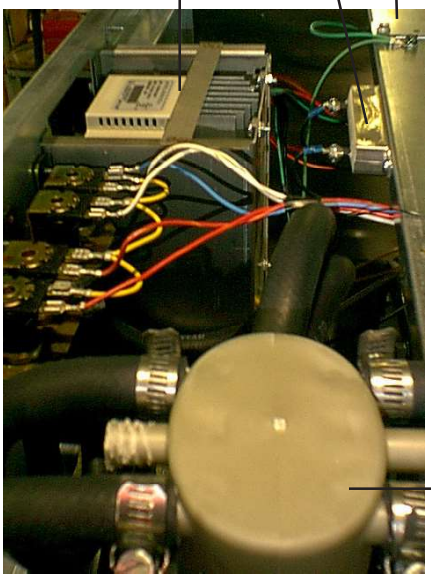
24
9
23
13

17 & 18
1
19
4
8

23
25
DELTA

REAR VIEW WCVD-18,WCVD-25,WCVD-40

Key	Part Number	Description	
1	9376-305-001	Drive Motor, 3 Phase (Inverter duty) WCVD-25,WCVD-40	1
1	9376-304-001	Drive Motor, 3 Phase (Inverter duty) WCVD-18	1
2	9497-222-002	Rod, Motor Mtg WCVD-18,WCVD-25	1
2	9497-222-004	Rod, Motor Mtg WCVD-14	
*	9545-029-005	Screw (end of motor rod) WCVD-18,WCVD-25,WCVD-40	1
*	8641-582-014	Lockwasher (end of motor rod)WCVD-18,WCVD-25,WCVD-40	1
3	9076-052-002	Collar, Shaft (w/set screws)	2
4	9453-170-003	Pulley, Motor WCVD-25,WCVD-40	1
4	9453-169-012	Pulley, Motor WCVD-18	1
*	9545-028-015	Set Screw,Sq.Hd(motor pulley)WCVD-18,WCVD-25,WCVD-40.	2
*	9487-234-001	Tolerance Ring WCVD-25	1
*	9487-234-002	Tolerance Ring WCVD-18	1
*	9487-234-003	Tolerance Ring WCVD-40	1
5	9453-168-003	Pulley, Driven WCVD-40	1
5	9453-168-004	Pulley, Driven WCVD-25	1
5	9908-041-002	Pulley,Ass'y Driven WCVD-18	1
6	9545-017-009	Screw 1/2-13x1 1/4" WCVD-18,WCVD-25	1
7	8641-581-026	Washer, Flat 1/2" WCVD-18,WCVD-25	1
6	8641-582-016	Lockwasher 1/2" WCVD-18,WCVD-25	1
6	9545-060-001	Screw 5/8-11x1/1/2" WCVD-40	1
7	8641-581-032	Washer, Flat 5/8x2 1/4" WCVD-40	1
6	8641-582-018	Lockwasher 5/8" WCVD-40	1
8	9040-076-004	Drive Belt WCVD-18	1
8	9040-076-005	Drive Belt WCVD-25,WCVD-40	2
9	9081-135-001	Channel, Rear WCVD-25	1
9	9081-132-001	Channel, Rear WCVD-18	1
9	9081-134-001	Channel, Rear WCVD-40	1
10	9545-008-026	Screw	4
*	8640-399-008	Nut, Spring	4
11	9242-449-002	Hose, Overflow to drain WCVD-25 WCVD-40,WCVD-18	1
12	9242-463-003	Hose, Overflow Vent 12 1/4" WCVD-40	1
12	9242-463-001	Hose, Overflow Vent 9" WCVD-18	1
12	9242-463-002	Hose, Overflow Vent 11" WCVD-25	1
13	8654-117-008	Clamp, Hose Vent	1
13	8654-029-000	Clamp, Hose overflow to drain	2
*	9610-001-001	Vaccum Breaker ALL	1

* Not Illustrated

REAR VIEW WCVD-18,WCVD-25,WCVD-40 CON'T

*	9989-446-002	Panel Assy., Back WCVD-25	1
*	9989-446-001	Panel Assy, Back WCVD-40	1
*	9454-632-001	Panel, Back WCVDF-18	1
*	9545-008-026	Screw Panel Mtg.#10Bx1/2"	10
*	8640-399-004	Nut, Spring WCVD-18,WCVD-25	10
*	8640-399-008	Nut, Spring WCVD-40	6
*	9545-030-002	Screw, to Base WCVD-40	3
14	9242-175-000	Hose, Pressure Switch WCVD-18,WCVD-25	1
14	9242-175-002	Hose, Pressure Switch WCVD-40	1
*	8654-117-015	Clamp, Pressure Sw. Hose	1
15	5198-211-004	Circuit Breaker, 1.5 amp optional	0
*	9200-001-002	Fuseholder	1
*	8636-018-001	Fuse 1.5 amp	1
16	9242-458-001	Hose, Vacuum Breaker to tub WCVD-18	1
16	9242-458-002	Hose, Vacuum Breaker to Tub WCVD-25, WCVD-40	1
*	8654-117-014	Clamp, Hose to Vacuum Breaker WCVD-18, WCVD-40	1
*	8654-117-008	Clamp, Hose to Vacuum Breaker WCVD-25	1
17	9029-027-003	Strap Bracket, Motor Tension	1
18	8640-413-002	Nut, Strap to Motor	1
18	8641-581-006	Washer	1
19	9534-319-002	Spring, Belt Tension	1
20	9545-055-001	Bolt, Eye (1/4"-20x1/2")	1
21	8640-414-003	Nut, 1/4 Elastic Stop	1
23	9375-004-002	VFD Delta "S" drive WCVD-18-10 120 volt	1
23	9375-005-002	VFD Delta "S" drive WCVD-18-12	1
23	9375-007-002	VFD Delta "S" drive WCVD-25	1
23	9375-007-003	VFD Delta "S" drive WCVD-40	1
24	9483-004-002	Braking resistors (200 ohm) WCVD-18	1
24	9483-004-002	Braking resistors (200 ohm) WCVD-25,WCVD-40	2
25	9985-177-001	Bracket ass'y(drive mounting) WCVD-25,WCVD-40,WCVD-18	1

WATER INLET VALVE BREAKDOWN

WCVD-18, WCVD-25, WCVD-40, WCVD-55

Key	Part Number		Description
*	9379-183-003	Valve, Water Inlet (includes 1 thru 6)	2
1	9555-056-001	Screen, Inlet end of valve	2
2	9089-017-001	Coil Assy., 120 V	2
3	9118-049-001	Diaphragm	2
4	9211-021-002	Guide, Solenoid	2
5	9015-008-001	Armature	2
6	9534-298-001	Spring, Armature	2
*	9545-008-026	Screw, Valve Mtg	2
		WCVD-75	
*	9379-192-001	Valve, Water Inlet double outlet	2
*	9379-194-001	Valve, Water Inlet single outlet	2

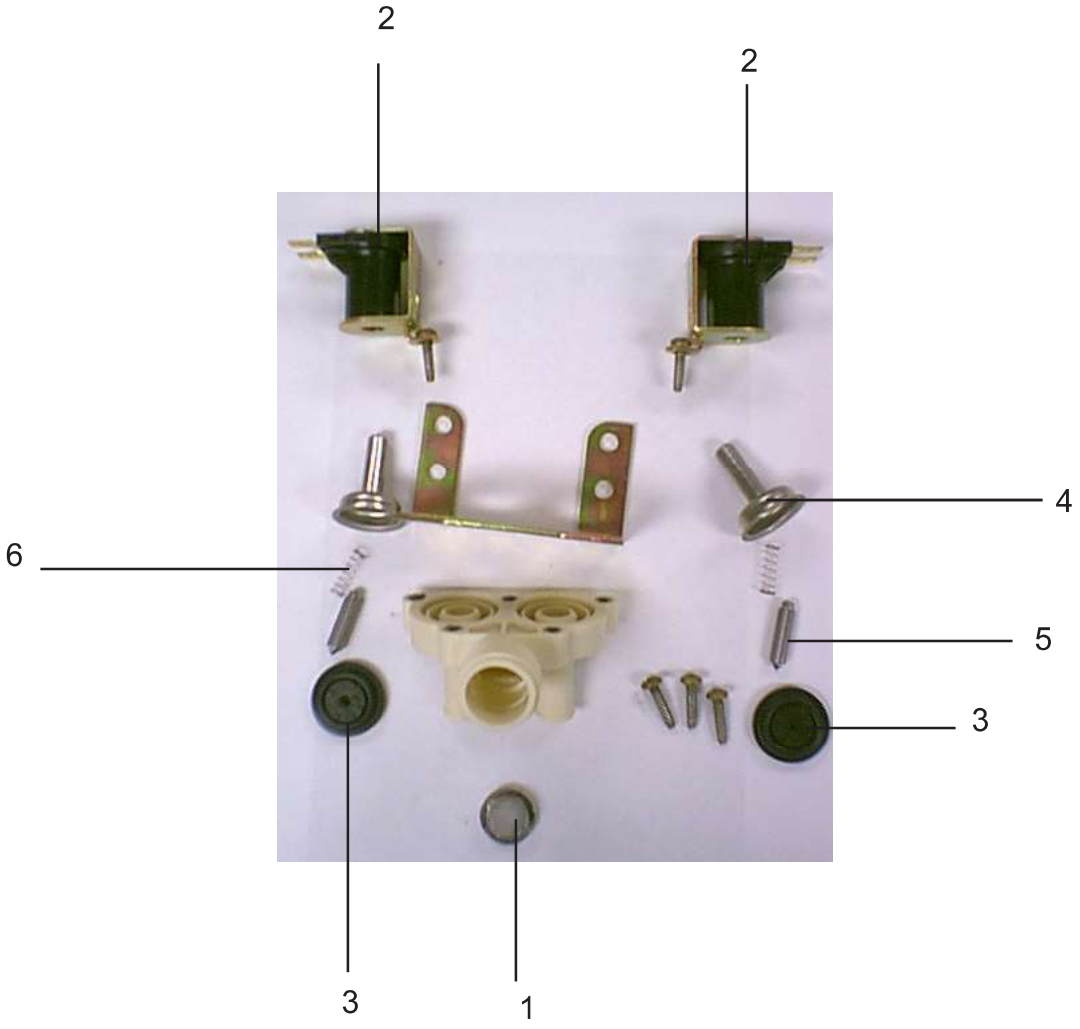

19
25
1
8
17
3
5&6
15
4
15
7
2
27
29,30,31
Old Style
mounting
16
12
28

new
style

11

23 & 24

11

22

12

28

REAR VIEW 55LB. ,75 LB.

*	9989-455-001	Panel Assy., Back WCVD-55	1
*	9989-491-001	Panel Assy, Back WCVD-75	1
*	9545-008-026	Screw Panel Mtg.#10Bx1/2" WCVD-55	9
*	9545-008-026	Screw Panel Mtg.#10Bx1/2" WCVD-75	13
15	8640-399-008	Nut, Spring WCVD-55	6
15	8640-399-008	Nut, Spring WCVD-75	10
16	9545-030-002	Screw, to Base 1/4Bx3/4" WCVD-55,WCVD-75	3
17	9242-175-003	Hose, Pressure Switch WCVD-55	1
17	9242-175-006	Hose, Pressure Switch WCVD-75	1
*	8654-117-015	Clamp, Pressure Sw. Hose	1
19	5198-211-004	Circuit Breaker, 1.5 amp WCVD-55 optional	0
*	9200-001-002	Fuseholder	1
*	8636-018-001	Fuse 1.5 amp WCVD-55	1
*	8636-018-004	Fuse 2.5 amp WCVD-75	1
20	9242-458-003	Hose, Vacuum Breaker to tub WCVD-55, WCVD-75	1
*	8654-117-014	Clamp, Hose to Vacuum Breaker WCVD-75, WCVD-55	1
11	9099-012-003	Chain (Spring Tension) WCVD-55	1
11	9099-012-004	Chain (Spring Tension) WCVD-75	1
22	9534-151-000	Spring, Belt Tension	1
23	9545-055-001	Bolt, Eye (1/4"-20 x 2 1/2")	1
24	8640-414-003	Nut, 1/4 Elastic Stop	1
25	9375-009-002	VFD Delta "S" drive WCVD-55	1
25	9375-009-005	VFD Delta "S" drive WCVD-75	1
*	9483-004-003	Braking resistors (160 ohm) 55lb.,75lb.	2
*	9985-115-001	Bracket ass'y(drive mounting) WCVD-55	1
	9029-150-001	**Bracket ass,y (drive mounting) WCVD-75**	**1**
27	9376-298-001	Drive Motor WCVD-55, WCVD-75 3 phase inverter dot	1
12	9497-222-004	Rod, Motor Mtg WCVD-55,WCVD-75	1
12	9545-029-005	Screw (end of motor rod)	1
12	8641-582-014	Lockwasher (end of motor rod)	1
28	9076-052-002	Collar, Shaft (w/set screws)	2
29	9453-175-002	Pulley, Motor WCVD-75,WCVD-55	1
30	9053-077-001	Bushing, Split Taper WCVD-55,WCVD-75	1
31	9545-018-021	Screw WCVD-75	3
31	9545-018-024	Screw WCVD-55	3
1	9242-463-004	Hose, Overflow Vent 14" WCVD-75,WCVD-55	1
2	9242-449-003	Hose, Overflow to drain WCVD-75, WCVD-55	1
3	9453-176-005	Pulley, Driven WCVD-55,WCVD-75	1
4	9053-078-002	Bushing, Taper WCVD-55,WCVD-75	1
5	9545-029-011	Screw	3
6	8641-582-003	Lockwasher	3
7	9040-079-003	Drive Belt WCVD-75,	1
7	9040-079-002	Drive Belt WCVD-55	1
8	9081-140-001	Channel, Rear WCVD-75	1
8	9081-109-001	Channel, Rear WCVD-55	1
9	9545-008-026	Screw	4
9	8640-399-008	Nut, Spring	4
10	8654-029-000	Clamp, Hose	2
11	9341-046-001	Link, Chain	1

* Not Illustrated

11

13

8
10
9

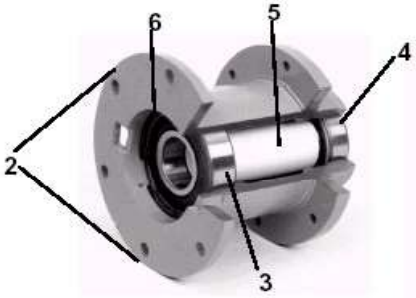
6
5
4
2
3

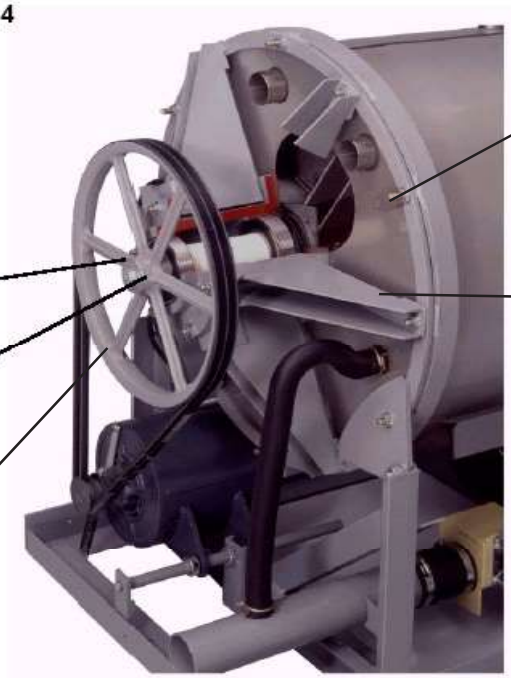
12
15
13
16
17
18
15

7
15

CYLINDER, WATER SEALS & BEARING HOUSING GROUP
18 LB. , 25 LB. , 40LB .

	Key	Part Number	Description
*	9803-179-002	Housing, Bearing- Assembly (includes items #2-#6)WCVD-25, ...	1
2	9241-169-002	Housing, Bearing	1
3	9036-159-002	Bearing, Front (LARGE)	1
4	9036-159-001	Bearing, Rear (SMALL)	1
5	9538-158-001	Spacer, Bearing	1
6	9487-238-001	Ring, Bearing Retainer (internal type)	1
*	9803-182-001	Housing, Bearing- Assembly (includes items #2-#6) WCVD-18	1
2	9241-174-002	Housing, Bearing	1
3	9036-159-001	Bearing, Front (LARGE)	1
4	9036-159-003	Bearing, Rear (SMALL)	1
5	9538-161-001	Spacer, Bearing	1
6	9487-238-002	Ring, Bearing Retainer	1
*	9803-186-001	Housing, Bearing- Assembly (includes items #2-#6) WCVD-40	1
2	9241-180-002	Housing, Bearing	1
3	9036-159-005	Bearing, Front(LARGE)	1
4	9036-159-004	Bearing, Rear (SMALL)	1
5	9538-167-001	Spacer, Bearing	1
6	9487-238-003	Ring, Bearing Retainer (Internal)	1
7	9732-137-001	Back Assy, Tub 2 piece WCVD-18	1
7	9732-137-002	Back Assy, Tub 2 piece WCVD-25	1
7	9732-137-003	Back Assy, Tub 2 piece WCVD-40	1
9	9532-140-004	Seal, Primary WCVD-18	1
8	9532-140-005	Seal, Secondary WCVD-18	1
8	9532-140-003	Seal, Secondary WCVD-25	1
9	9532-140-002	Seal, Primary WCVD-25 WCVD-40	1
8	9532-140-006	Seal, Secondary WCVD-40	1
10	9950-047-001	Ring, Seal Mounting WCVD-18	1
10	9950-042-001	Ring, Seal Mounting WCVD-25	1
10	9950-048-001	Ring, Seal Mounting WCVD-40	1
11	9487-261-001	Tub Back Mating Ring WCVD-18	1
11	9487-261-002	Tub Back Mating Ring, WCVD-25	1
11	9487-261-003	Tub Back Mating Ring, WCVD-40	1
12	9545-017-009	Bolt, 1/2" Tub End of Bearing Housing (1/2" x 1 1/4") WCVD-25	6
12	8640-417-002	Nut 1/2'	6
12	8641-582-016	Lockwasher 1/2" (ext. tooth)	6
12	9545-060-001	Bolt 5/8-11x1 1/2" Tub end of bearing housing WCVD-40	6
12	8640-425-001	Nut 5/8"	6
12	8641-582-018	Lockwasher 5/8"	6
13	9991-049-002	Support Arm Assy, Bearing Housing WCVD-18	6
13	9991-048-002	Support Arm Assy., Bearing Housing WCVD-25	6
13	9991-056-002	Support Arm Assy, Bearing Housing WCVD-40	6
16	9545-029-003	Bolt Pulley End of Bearing Housing (3/8" x 1 1/2") WCVD-25	6
16	8640-415-004	Nut, Flange Locking 3/8" WCVD-25	6
16	9545-059-003	Bolt Pulley end of bearing housing 7/16-14x2" WCVD-40	6
16	8640-416-005	Nut, Flange Locking 7/16" WCVD-40	6
15	9453-168-003	Puley, Driven WCVD-40	1
15	9453-168-004	Pulley, Driven WCVD-25	1
15	9908-041-002	Pulley, Driven WCVD-18	1
*	9487-234-001	Ring, Tolerance WCVD-25 Between shaft and pulley	1
*	9487-234-002	Ring, Tolerance WCVD-18 Between shaft and pulley	1
*	9487-234-003	Ring, Tolerance WCVD-40 Between shaft and pulley	1
16	8641-581-026	Washer 1/2" WCVD-18,WCVD-25	1
17	9545-017-009	Bolt 1/2-13 x 1 1/4")	1
18	8641-582-016	Lockwasher 1/2" Ext. tooth	1
16	8641-060-001	Bolt 5/8-11x11/2" WCVD-40	1
17	8641-581-032	Washer 5/8"	1
18	8641-582-018	Lockwasher 5/8 Ext. tooth	1

CYLINDER, WATER SEALS & BEARING HOUSING GROUP
55LB. & 75LB.

Key	Part Number	Description	
1	9848-116-001	Cylinder, Assy WCVD-55	1
1	9848-125-001	Cylinder, Assy WCVD-75	1
*	9869-009-001	Tub and Cylibnder Assy. WCVD-55	1
*	9869-015-001	Tub and Cyclinder Assy. WCVD-75	1
*	9803-187-001	Housing&Bearing Assembly WCVD-55,WCVD-75(includes items #2-#6)	1
2	9241-181-004	Housing, Bearing	1
3	9036-159-006	Bearing, Front	1
4	9036-159-005	Bearing, Rear	1
5	9538-170-001	Spacer, Bearing	1
6	9487-238-004	Ring-Retainer, Internal	1
7	9545-057-002	Screw, Bearing Housing, 3/4-10 x 3 WCVD-55,WCVD-75	6
7	8641-581-033	Washer, Flat- To Frame WCVD-55	6
7	8641-582-020	Washer, External Tooth WCVD-55	6
7	8640-418-003	Nut 3/4-10 WCVD-55,WCVD-75	6
8	9532-140-008	Seal, Secondary (small) WCVD-55,WCVD-75	1
9	9532-140-007	Seal, Primary (large) WCVD-55,WCVD-75	1
10	9950-052-001	Ring, Seal Mtg WCVD-55,WCVD-75	1
11	9487-261-004	Ring, Seal Tub Back WCVD-55,WCVD-75	1
12	9545-059-004	Screw, 7/16-14 x 1 SS (Tub Back to Bearing Housing) WCVD-55,WCVD-75	6
12	8641-581-034	Washer, Flat WCVD-55,WCVD-75	6
13	9453-176-005	Pulley, Driven WCVD-55,WCVD-75	1
14	9053-078-002	Bushing, Taper WCVD-55,WCVD-75	1
15	9545-029-011	Screw 3/8-16-2	3
15	8641-582-003	Lockwasher spring 3/8	3
16	9241-466-002	Hose, Fill 19” WCVD-75	2
17	8654-117-017	Clamp	4
18	8641-588-001	Washers Spherical 3/4 (Male half) WCVD-75 Required	6
18	8641-588-002	Washers Spherical 3/4 (Female half) WCVD-75 Required	6

* Not Illustrated

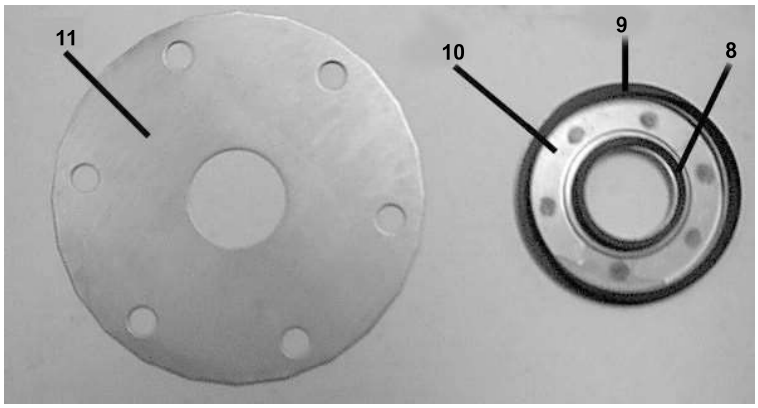
11
10
9
8

7
18

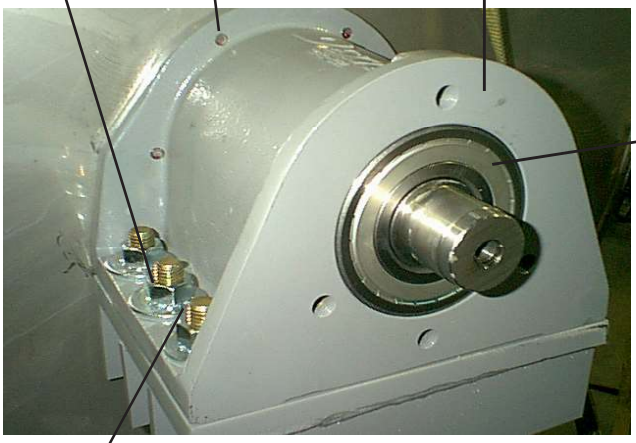
18
12
bearing housing
4
7

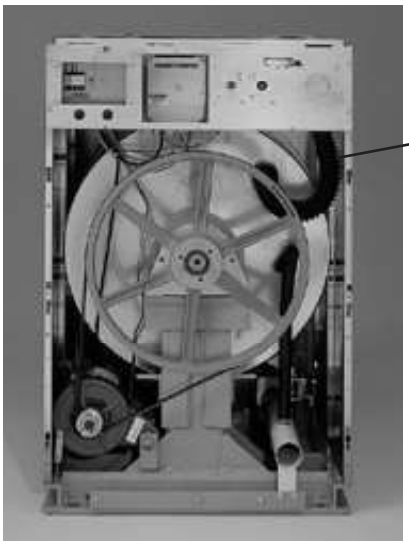
16

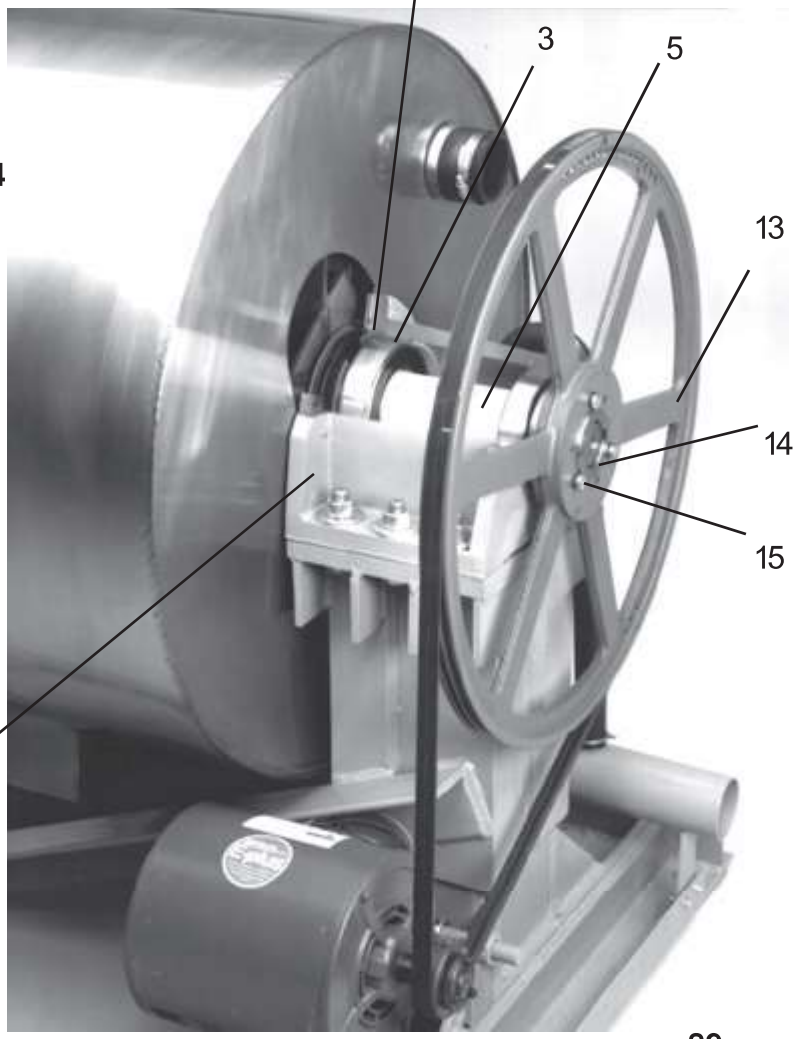
6
3
5
13
14
15
2

DOOR LOCK GROUP ALL MODELS

WCVD-18 , WCVD-25, WCVD-40, WCVD-55, WCVD-75

Key	Part Number	Description	
*	9885-023-001	Lock Assy, Complete (includes #1 thru #22)	1
1	9982-284-001	Plate Assy, Door Lock	1
2	8641-581-030	Washer, Flat	1
3	9008-005-001	Actuator, Latching Switch	1
4	9450-002-002	Pawl, Locking	1
5	8641-569-003	Washer, Spring	1
6	9487-200-004	Ring, Retaining	1
7	9029-035-001	Bracket, Switch	1
8	8640-413-002	Nut, Hex 10-32 UNF	2
9	9534-364-002	Spring, Actuating	1
10	9545-012-020	Screw, Hx. 10-32 x 1”	1
11	8640-413-004	Nut, Elastic Stop 10-32	2
12	9534-364-001	Spring, Return	2
13	9451-193-001	Pin, Guide	1
14	9487-200-005	Ring, Retaining	1
15	8641-581-031	Washer	2
16	9539-461-008	Switch, Latching Sensing	1
17	9550-169-003	Shield, Switch	3
18	9545-020-001	Screw 4-40 x 5/8”	2
18	8640-401-001	Nut, Twin	1
19	9539-461-007	Switch, Locking Sensing	2
20	9008-006-002	Actuator, Switch	2
21	9545-020-003	Screw 4-40 x 1 1/8”	2
21	8640-401-001	Nut, Twin 4-40	1
22	9451-181-004	Pin, Dowel	1
*	9552-037-001	Shim, Door Lock, Thin	AR
*	9552-037-002	Shim, Door Lock, Thick	AR
*	9545-018-004	Screw, Lock mtg 1/4”-20 x 3/4”	3
*	8641-582-007	Lockwasher 1/4” Ext tooth	3
*	9922-011-001	Solenoid Ass'y, Door Locking (includes 23 thru 32)	1
23	9029-073-001	Bracket, (Door Locking Solenoid)	1
24	9985-169-001	Bracket Ass'y, Solenoid Slide	1
25	9536-074-001	Solenoid 120V 60 hz	1
26	9545-008-001	Screw, Solenoid Mtg	4
27	9540-033-002	Stop, Door Lock Solenoid	1
28	9545-061-001	Screw, Shoulder	1
28	8640-411-003	Nut, Keps #6	1
29	9586-001-001	Thermoactuator 120 V	2
30	9545-031-011	Screw #6 x 5/16”	4
31	9538-157-004	Spacer, Plastic	1
31	9538-166-004	Spacer, Metal	1
31	9545-010-001	Screw, Cross Recessed	1
31	8640-412-005	Nut, Keps #8	1
32	8640-411-003	Nut, Keps #6	1
*	8640-412-005	Nut, Sol. Brkt. to Control Panel	3
*	9497-225-006	Rod, Pull	1

* Not Illustrated

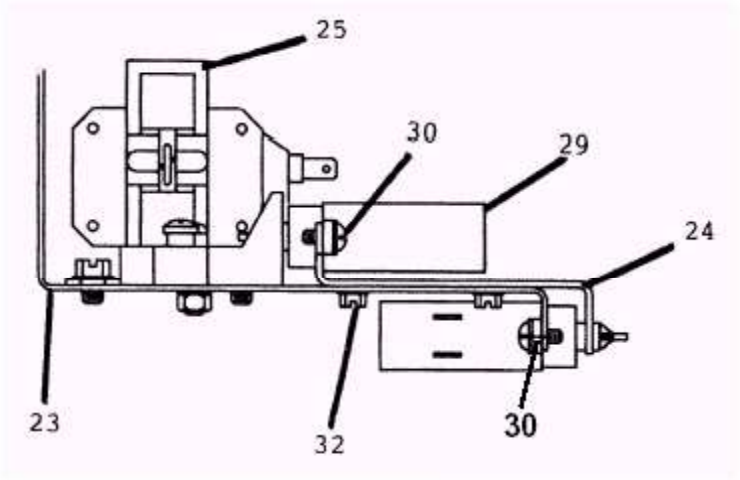
25
30
29
24
23
32
30

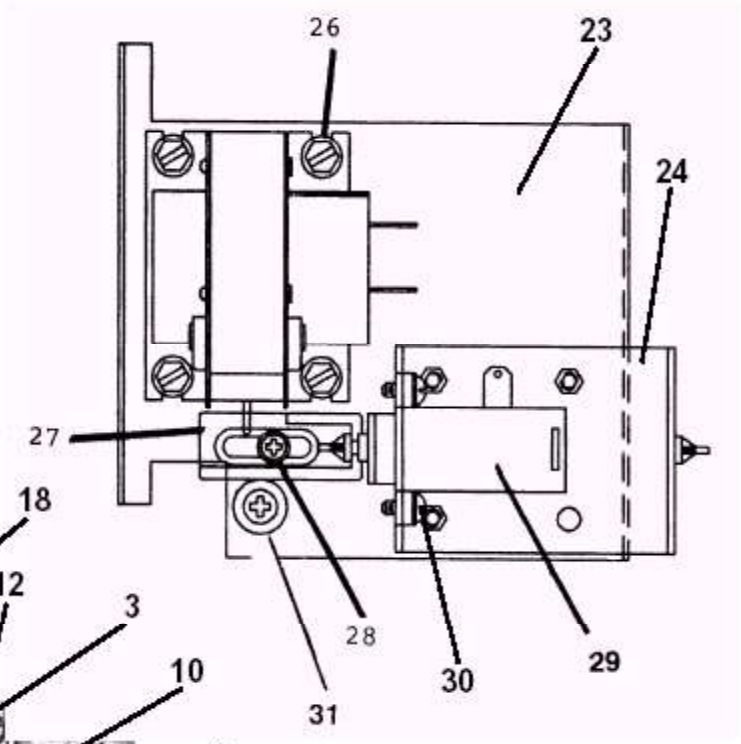
26
23
24
27
28
31
30
29

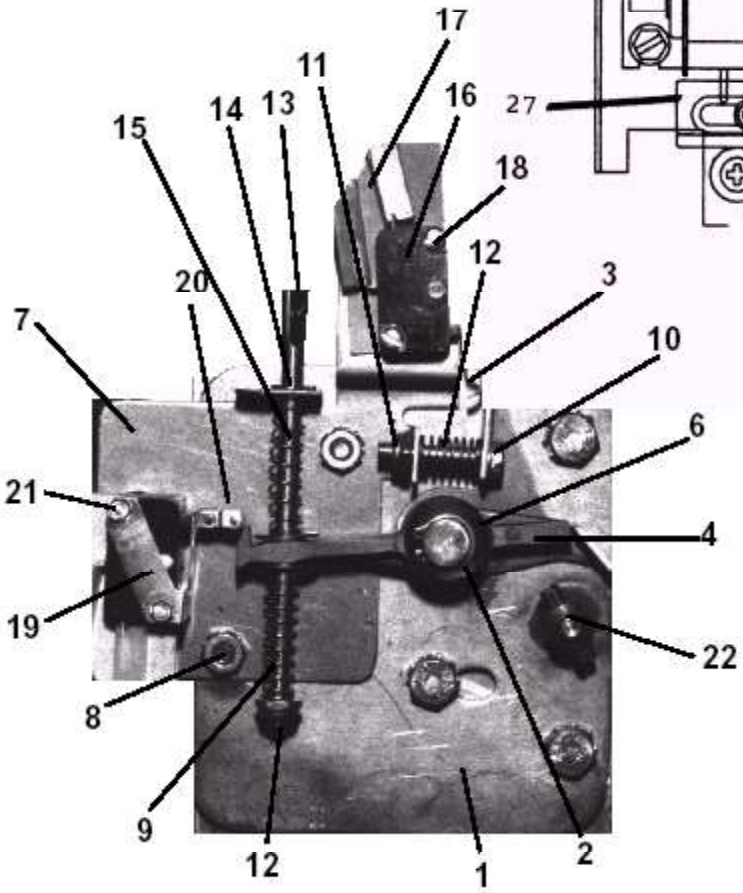
17
11
16
14
13
15
18
12
20
3
7
10
6
21
4
19
22
8
9
12
1
2

7

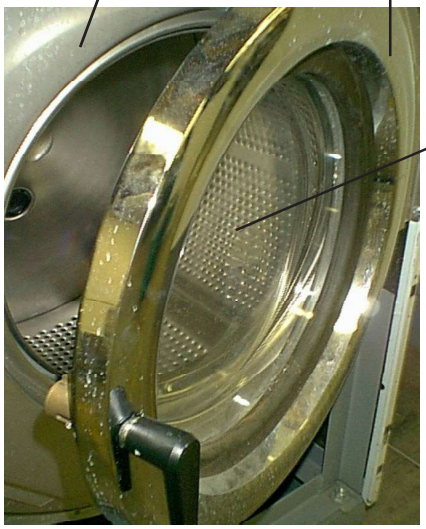
14
1
3

6
4
7
5
8

14
2
13
12

14
switch box

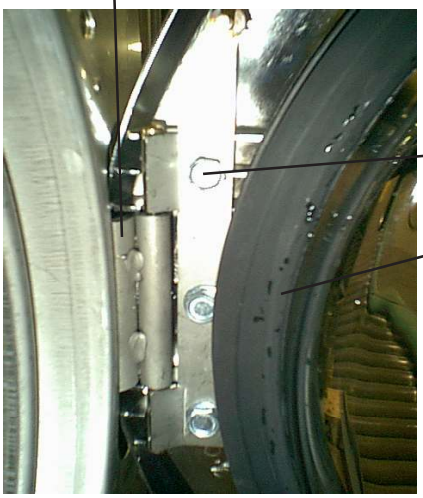
10
13
2

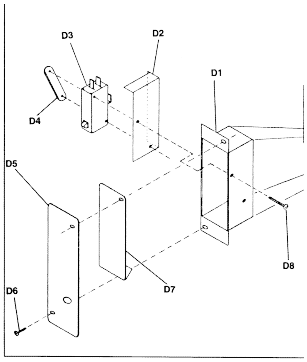
D3
D2
D1
D4
D5
D8
D6
D7

4
9

14
12
2

LOADING DOOR GROUP 25LB.,40LB.,55LB.

WCVD25KCS, WCVD40KCS, WCVD55KCS

Key	Part Number	Description	
*	9960-274-002	Loading Door, Complete (includes 1 thru 10)	1
1	9487-265-001	Loading Door, Ring	1
2	9206-419-001	Gasket, Loading Door	1
3	9635-016-001	Window, Loading Door	1
*	9913-134-003	Shaft Assy, Locking (includes 4 thru 7)	1
4	9537-195-002	Shaft, Door Locking	1
5	9095-040-001	Cam, Locking	1
6	9451-181-005	Pin, Groove (1 1/4)	1
7	9451-181-004	Pin, Groove (3/4)	1
8	9534-360-002	Spring, Lock Cam	1
9	9244-080-003	Handle, Door	1
*	9451-181-006	Pin, Door Handle (groove)	1
10	9955-029-002	Loading Door Hinge Assy (mounts to Tub Front)	1
*	9545-014-009	Screw, Hinge Mtg 5/16” x 3/4”	3
*	8641-582-009	Lockwasher 5/16” Ext tooth	3
*	9552-036-001	Shim, Loading Door Hinge, Thin	AR
*	9552-036-002	Shim, Loading Door Hinge, Thick	AR
11	9451-184-004	Door Hinge Pin(mounts inside Loading Door Hinge Assy)	1
*	8649-031-000	Ring, Retaining (snap ring ext)	1
12	9079-122-002	Loading Door Hinge Clamp (mounts to door ring)	1
13	9545-056-001	Screw, Loading Door Mtg 5/16” Theard Forming)	3
14	9950-060-001	Ring, Masking	1
*	9059-063-002	Band, Edge (mounts to Front Panel)	1
*	8640-413-002	Nut, Kepsfor mounting masking ring	4
*	9627-791-003	Wiring Harness doorlock safety switch	1
*	9801-089-001	Switch assembly Door Closure includes all **	1
D1	9041-087-001	Switch Box	1
**	9053-067-003	Bushing Insulating	1
D3	9539-461-007	Switch Micro	1
D2	9550-159-001	Switch Shield	1
D4	8640-401-001	Nut Special Twin #4-40	1
D8	9545-020-001	Screw 4-40x5/8	2
D7	9008-004-001	Door Switch Actuator	1

* Not Illustrated

LOADING DOOR GROUP 75LB.
180` DOOR

KEY	PART NUMBER	DESCRIPTION	
*	9960-274-004	Loading Door, Complete (includes #1thru #10)	.1
1	9487-265-002	Loading Door Ring 180 degree	.1
2	9206-419-001	Gasket, Loading Door	1
3	9635-016-001	Window, Loading Door	.1
4	9913-134-003	Shaft Assy. Locking (includes #5 thru #8).see below	.1
5	9537-195-002	Shaft, Door Locking	.1
6	9095-040-001	Cam, Locking	1
7	9451-181-005	Pin, Groove (1 1/4)	.1
8	9451-181-005	Pin, Groove (3/4)	1
9	9534-360-002	Spring, Lock Cam	1
10	9244-080-003	Handle, Door	.1
17	9451-181-006	Roll Pin, Door Handle (groove)	1
11	9955-030-001	Hinge Assy, Loading Door (mounts to tub front)....	.1
*	9545-014-009	Screw, Hinge Mtg	3
*	8641-582-009	Lockwasher	3
*	9552-036-001	Shim, Loading Door Hinge, Thin	.AR
*	9552-036-002	Shim, Loading Door Hinge, Thick	.AR
12	9845-005-003	Top, Loading Door Leaf Hinge.with pin	1
13	9845-005-002	Bottom, Loading Door Leaf Hinge	1
16	9545-056-002	Screw, Loading Door Hinge Mtg.	3
15	9950-060-002	Ring, Masking w door switch hole	1
*	8640-413-002	Nut	.4
*	9059-063-002	Band Edge Protector	.1
*	9801-089-001	Switch assembly Door Closure	1
D1	9041-087-001	Switch Box	1
*	9053-067-003	Bushing Insulating	1
D3	9539-461-007	Switch Micro	1
D2	9550-159-001	Switch Shield	1
D4	8640-401-001	Nut Special Twin #4-40	1
D8	9545-020-001	Screw 4-40x5/8	2
D7	9008-004-001	Door Switch Actuator	1

* Not Illustrated

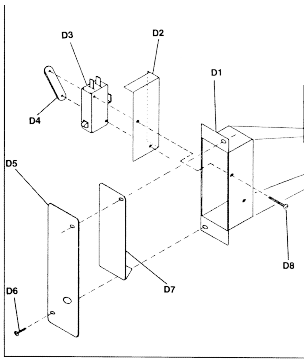

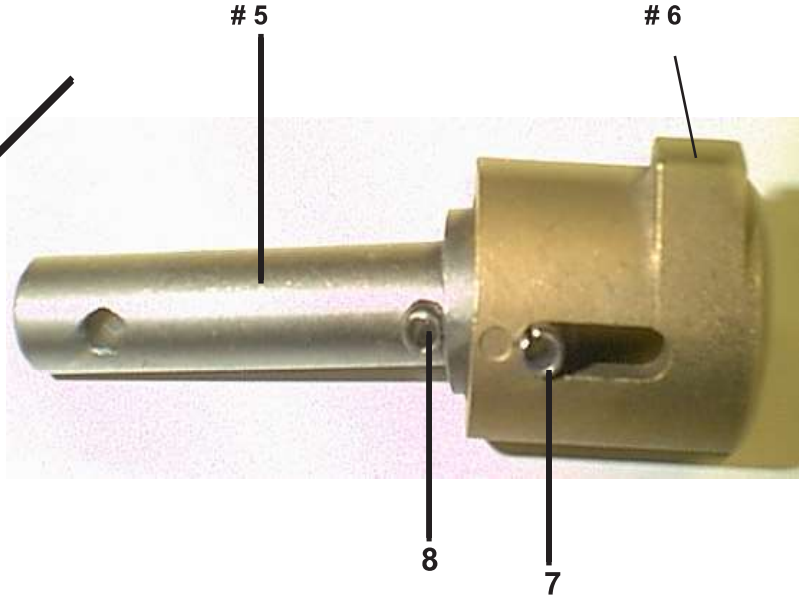

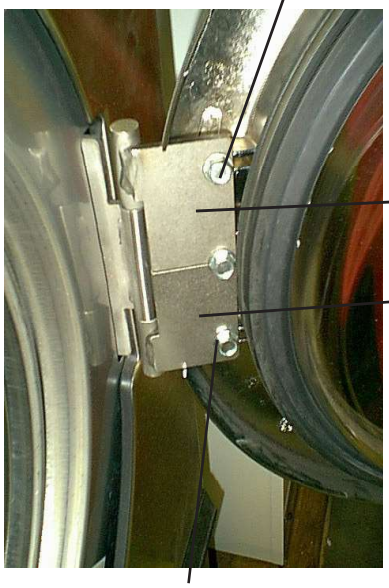
16
12
13
16

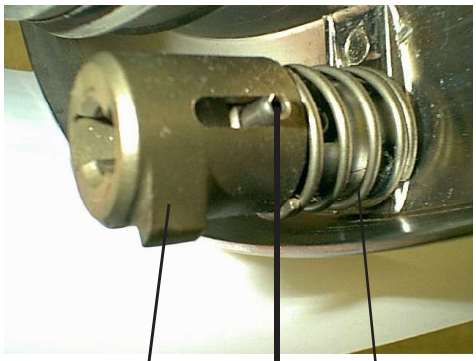
6
7
9

masking ring
12

11
3
1

12
13
masking ring
16

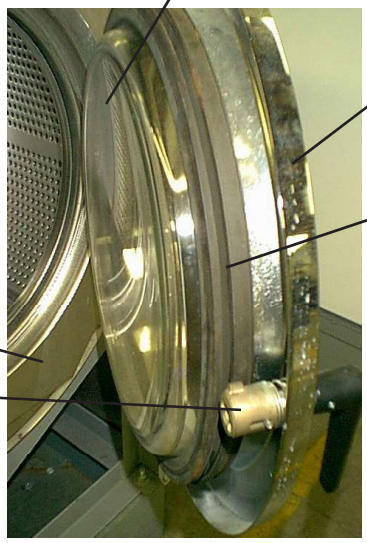
3
1
2
15
6

10
10

1

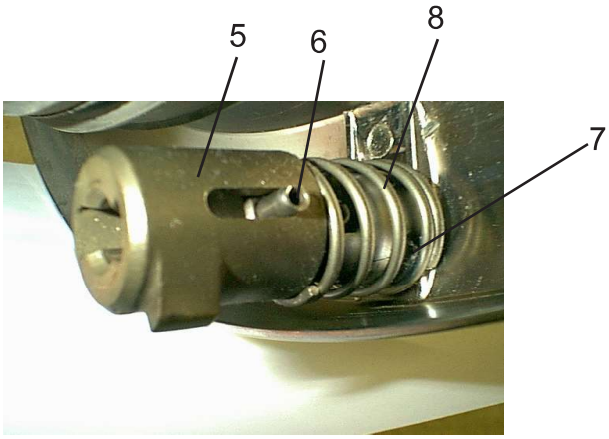
5
6
8
7

12
13

19

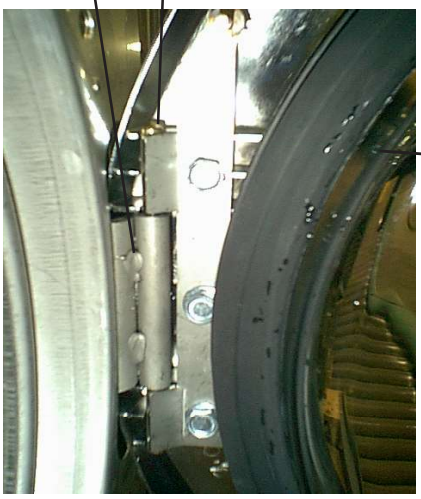
10
11
12

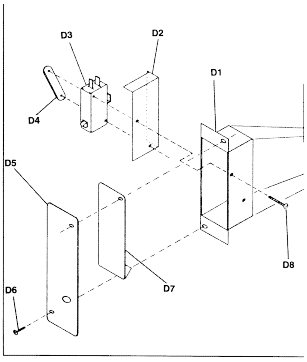
D3
D2
D1
D4
D5
D8
D7
D6

handle
pin
4
9

2
12

LOADING DOOR GROUP 18LB.

WCVD18KCS

Key	Part Number	Description	
*	9960-273-001	Loading Door, Complete (includes 1 thru 10)	1
1	9487-264-001	Loading Door, Ring	1
2	9206-411-002	Gasket, Loading Door	1
3	9635-018-001	Window, Loading Door	1
*	9913-134-003	Shaft Assy, Locking (includes 4 thru 7)	1
4	9537-195-002	Shaft, Door Locking	1
5	9095-040-001	Cam, Locking	1
6	9451-181-005	Pin, Groove (1 1/4)	1
7	9451-181-004	Pin, Groove (3/4)	1
8	9534-360-002	Spring, Lock Cam	1
9	9244-080-003	Handle, Door	1
*	9451-181-006	Pin, Door Handle (groove)	1
10	9955-029-002	Loading Door Hinge Assy (mounts to Tub Front)	1
*	9545-014-009	Screw, Hinge Mtg 5/16” x 3/4”	3
*	8641-582-009	Lockwasher 5/16” Ext tooth	3
*	9552-036-001	Shim, Loading Door Hinge, Thin	AR
*	9552-036-002	Shim, Loading Door Hinge, Thick	AR
11	9451-184-004	Loading Door Hinge Pin(mnts inside Loading Door Hinge Assy)	1
*	8649-031-000	Ring, Retaining (snap ring ext)	1
12	9079-122-002	Loading Door Hinge Clamp (mounts to door ring)	1
13	9545-056-001	Screw, Loading Door Mtg (5/16” Theard Forming)	3
14	9950-059-001	Ring, Masking Assembly	1
*	9059-063-002	Band, Edge (mounts to Front Panel)	1
*	8640-413-002	Nut, Keps	4
15	9539-461-007	Switch Safety	1
16	9550-159-001	Safety switch shield	1
17	8220-062-027	Wires Red	1
18	8220-062-028	Wires Black	1
19	9801-089-001	Switch Assembly Complete Door Closure include 20-26	1
D1	9041-087-001	Switch Box	1
21	9053-067-003	Bushing Insulating	1
D3	9539-461-007	Switch Micro	1
D2	9550-159-001	Switch Shield	1
D4	8640-401-001	Nut Special Twin #4-40	1
D8	9545-020-001	Screw 4-40x5/8	2
D7	9008-004-001	Door Switch Actuator	1

* Not Illustrated

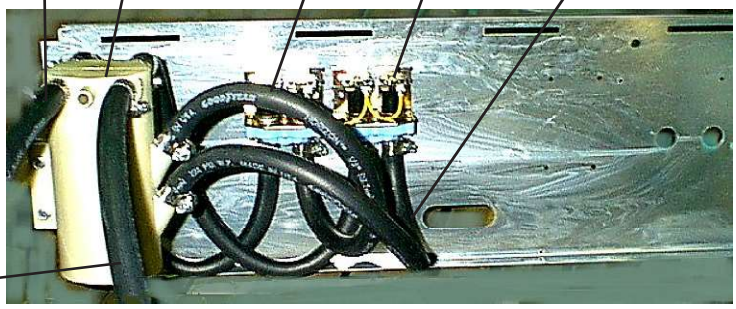
12
5
13
1
14
13

18
MAX. 1.5A FUSE
DANGER—HIGH VOLTAGE
DISCONNECT FROM POWER BEFORE SERVICING OR CHANGING FUSES.
COUPER L'ALIMENTATION AVANT L'ENTRETIEN ET LE DEPANNAGE.
NOTICE
REMOVE THIS COVER FOR POWER AND/OR INJECTION SYSTEM ELECTRICAL CONNECTIONS.
WARNING-REPLACE COVER
TO AVOID SERIOUS INJURY OR ELECTRICAL SHOCK, BACK PANEL AND ALL COVERS MUST BE IN PLACE BEFORE OPERATING MACHINE.
AVIS
CONNEXIONS ÉLECTRIQUES ET/OU DU SYSTÈME À INJECTION DERRIÈRE CE COUVERCLE.
AVERTISSEMENT
REMETTRE LE COUVERCLE EN PLACE
POUR ÉVITER TOUT RISQUE DE BLESSURE GRAVE OU DE CHOC ÉLECTRIQUE, S'ASSURER QUE LE PANNEAU ARRIÈRE ET LES COUVERCLES SONT EN PLACE AVANT DE METTRE L'APPAREIL EN MARCHE.
ATTENTION

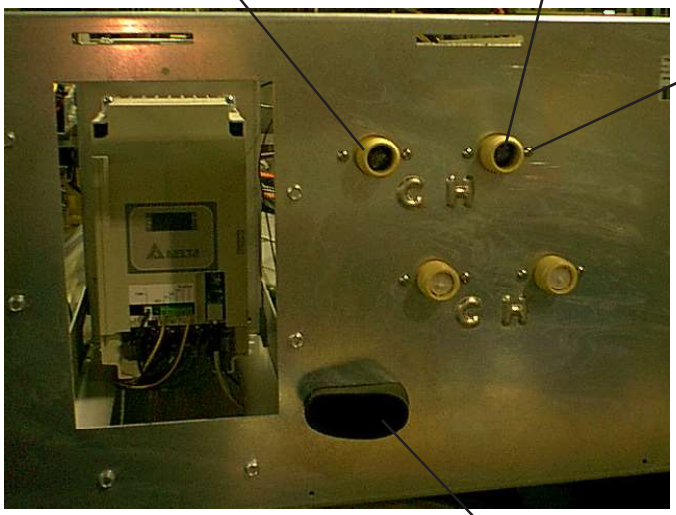
2
2
75 lb outlet group
vent hose

18
MAX. 1.5A FUSE
DANGER—HIGH VOLTAGE
DISCONNECT FROM POWER BEFORE SERVICING OR CHANGING FUSES.
COUPER L'ALIMENTATION AVANT L'ENTRETIEN ET LE DEPANNAGE.
NOTICE
REMOVE THIS COVER FOR POWER AND/OR INJECTION SYSTEM ELECTRICAL CONNECTIONS.
AVIS
CONNEXIONS ÉLECTRIQUES ET/OU DU SYSTÈME À INJECTION DERRIÈRE CE COUVERCLE.
high voltage label

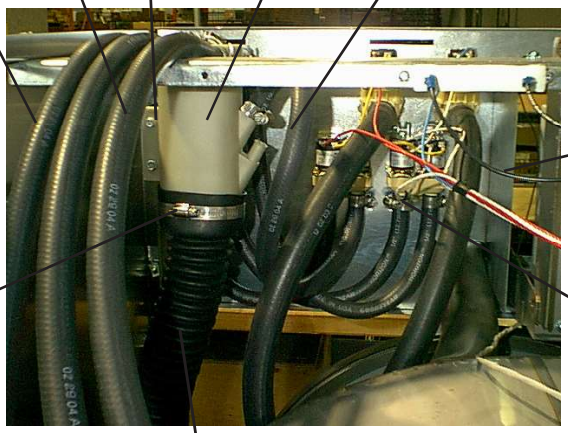
13
6
12
5
13
4
10
15
9

WATER INLET GROUP

WCVD-18,WCVD-25,WCVD-40,WCVD-55,WCVD-75

Key	Part Number	Description	
1	9379-183-003	Valve, Water Inlet (All except 75)	2
		(see Water Inlet Valve Breakdown for individual parts)	
1	9379-192-001	Valve Water Inlet WCVD-75 (dual outlet)	2
2	9379-194-001	Valve Water Inlet WCVD-75 (Single outlet)	2
*	9545-008-026	Screw, Valve Mtg (ALL except 75)	4
3	8640-399-009	Nut, Spring (All except 75)	4
*	9545-064-001	Screw, Valve M4x0.7x8mm WCVD-75	8
4	9208-049-001	Guard Water valve terminal ALL	1
5	9610-001-001	Vacuum Breaker ALL	1
6	9029-069-001	Bracket, Vacuum Breaker ALL	1
7	9545-008-026	Screw ALL	4
*	9550-186-001	Shield over Water Valves Plastic (All except 75)	1
9	9242-458-003	Hose, Vacuum Breaker to Tub ALL	1
10	8654-117-014	Clamp, Vacuum Breaker End ALL	1
11	8654-117-009	Clamp, Tub End ALL	1
12	9242-453-018	Hose, Vac. Brkr. to Disp.29” WCVD-55	1
12	9242-453-019	Hose, Vac. Brkr. to Disp.26” WCVD-55	1
13	9242-453-020	Hose, Hot Valve to Vac. Brkr 18” ALL	1
13	9242-453-020	Hose, Hot Valve to Tub 18” ALL	1
14	9242-453-020	Hose, Cold Valve to Vac. Brkr 18” ALL	1
14	9242-453-020	Hose, Cold Valve to Tub 18” ALL	1
12	9242-453-022	Hose, Vac. Brkr. dispenser 43” WCVD-75	3
13	9242-453-009	Hose, (valve to vac. Brkr) 23” WCVD-75	4
*	8654-029-000	Clamp, Hose-Spring (overflow from drain to tub back)	2
15	8654-117-015	Clamp, Hose-Worm	10
18	5198-211-004	Circuit Breaker (optional)	1
18	9200-001-002	Fuseholder	1
18	8636-018-001	Fuse 1.5 amp (All except 75)	1
18	8636-018-004	Fuse 2.5 amp WCVD-75	1
19	8502-716-001	Label Fuse 1.5 amp	1
*	8502-716-002	Label Fuse 2.5 a,p	1

* Not Illustrated

DRAIN VALVE GROUP

WCVD-25,WCVD-40,WCVD-55,WCVD-75

Key	Part Number	Description	
*	9379-187-001	Valve, Drain (includes 2 thru 11) (3")	1
2	9064-070-001	Body, Valve (w/ball)	1
3	9914-137-001	Motor & Gear Train	1
4	9452-538-001	Plate, Motor Mtg	1
5	8639-994-001	Screw	3
6	9534-339-001	Spring, Drive	1
7	9545-054-001	Screw	2
8	9545-054-002	Screw	1
9	9532-134-001	Seal, V Packer	2
10	8641-584-001	Washer	1
11	9451-196-001	Pin, Main Drive	1
12	9538-149-001	Plate (spacers needed for replacement motor mtg. plate)	4
		WCVD-18-10 WCVD-18 -12	
*	9379-177-006	Valve, Drain (includes #2 thru #11)	1
2	9064-068-001	Body, Valve (w/ball)	1
3	9914-137-001	Motor & Gear Train	1
4	9452-538-001	Plate, Motor Mtg	1
5	8639-994-001	Screw	3
6	9534-340-001	Spring, Drive	1
7	9545-054-001	Screw	2
8	9545-054-002	Screw	1
9	9532-134-001	Seal, V Packer	2
10	8641-584-001	Washer	1
11	9451-196-001	Pin, Main Drive	1
12	9538-149-001	Plate (spacers needed for replacement motor mtg. plate)	4

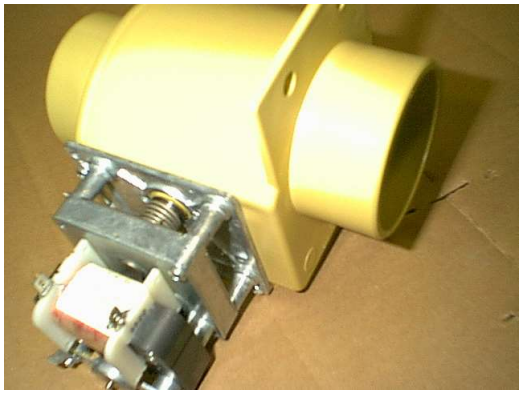

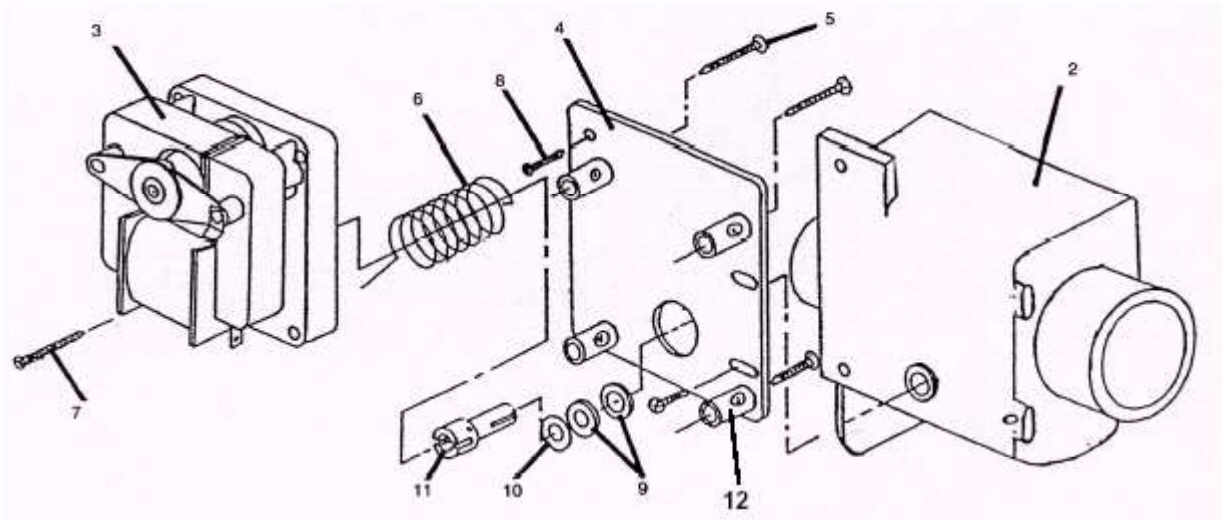
3
4
5
2
6
8
7
11
10
9
12

WIRING HARNESS GROUP ALL WCVD MODELS

9794-001-001	Wiring Harness, (Add Bleach Lite assy included) ALL	1
9627-791-003	Wiring Harness, DoorLock WCVD-18,WCVD-25	1
9627-791-004	Wiring Harness, Doorlock WCVD-40,WCVD-55, WCVD=75	1
9627-792-001	Wiring Harness,CoinDrop Mech ALL	1
9627-796-001	Wiring Harness, Drain,Thermo,DoorSol WCVD-18,WCVD-25,WCVSD-40	
9627-796-002	Wiring Harness, Drain,Thermo,Door Sol. WCVD-55,WCVD-75	1
8654-125-001	Clamp, Cable- 1/4 Dia. ALL	1
8653-074-001	Connector, Clear In-Line ALL	AR
9806-015-001	Data Cable ALL xcpt. 75lb	1
9806-015-003	Data Cable WCVD-75	1
9627-793-001	Wiring Harness P20/P21 ALL	1
9627-794-001	Wiring Harness ,P8/P16 ALL	1
9627-795-001	Wiring Harness WaterValve/P19 WCVD-18,WCVD-25	1
9627-795-002	Wiring HarnessWaterValve/P19WCVD-55,WCVD-75,WCVD-40	1
9627-797-001	Wiring Harness ,LED PCB ALL	1
9627-800-001	Wiring Harness ,P5/pressure WCVD-18	1
9627-801-001	Wiring Harness ,P5/pressure WCVD-25	1
9627-802-001	Wiring Harness ,P5/pressure WCVD-40	1
9627-803-001	Wiring Harness , P5/pressure WCVD-55, WCVD-75	1
8220-064-023	Wiring Assembly Yel. 32" ALL xcpt 75	2
8220-064-040	Wiring Assembly Yel. 64" WCVD-75	2
8220-062-025	Wiring Assembly Red 28" WCVD-40,WCVD-55	2
8220-062-032	Wiring Assembly Red 41" WCVD-75	2
8220-001-282	Wiring Assembly Red 20" WCVD-18,WCVD-40,WCVD-25	2
8220-118-001	Wiring Assembly Vio. 24" WCVD-18	2
8220-108-007	Wiring Assembly Wht/Brn 8" WCVD-75	1
8220-123-001	Wiring Assembly Jumper Yel WCVD-55,WCVD-18,WXCVD-40,WCVD-25	
8220-128-001	Wiring Assembly Jumper Yel WCVD-75	1
8220-062-025	Wiring Assembly Red 28" WCVD-55,WCVD-40	2
8220-062-028	Wiring Assembly Blk. 17" ALL	1
8220-062-027	Wiring Assembly Red 17" ALL	1
8220-063-008	Wiring Assembly Wht/Grn 16" WCVD-55,WCVD-40,WCVD-25	1
8220-063-009	Wiring Assembly Blu 16" WCVD-55,WCVD-40,WCVD-25	1
8220-117-001	Wiring Assembly Jumper BLK.WCVD-40,WCVD-75,WCVD-25	2
9631-381-018	Wiring Assembly Red 7" ALL	1
8220-090-009	Wiring Assembly Blu/Wht ALL	1
8220-001-231	Wiring Assembly Blk/Blu ALL	1
8220-001-478	Wire Assembly Green 7" WCVD-18	1
9627-747-002	Harness Power Terminal Block WCVD-55,WCVD-75	1
9627-747-003	Harness Power Terminal Block WCVD-25, WCVD-40	1
9627-831-001	Harness Power Terminal Block WCVD-18	

SCHEMATICS, LABELS AND DIAGRAMS
ALL WCVD MODELS

9506-001-001	Wiring Diagram, WCVD-18-10
9506-003-001	Wiring Diagram, WCVD-25
9506-037-001	Wiring Diagram,WCVD-75
9506-009-001	Wiring Diagram, WCVD-55
9506-005-001	Wiring Diagram, WCVD-40
9506-007-001	Wiring diagram, WCVD-18-12
8507-330-001	Transient Voltage Surge Suppressor Infomational
8507-275-001	Instructions Spin Direction WCVD-55,WCVD-75
8507-274-001	Instructions Spin Direction WCVD-25, WCVD-40
8507-273-001	Instructions Spin Direction WCVD-18
9506-002-001	Wiring Schematic WCVD-18-10
9506-004-001	Wiring Schematic WCVD-25
9506-038-001	Wiring Schematic WCVD-75
9506-010-001	Wiring Schematic WCVD-55
9506-006-001	Wiring Schematic WCVD-40
9506-008-001	Wiring Schematic WCVD-18-12
8502-614-004	Label High Voltage Warning
8502-619-003	Label Fusing & Installation
8502-624-002	Label Door Opening Warning
8511-001-002	Label Quality

20
22
27

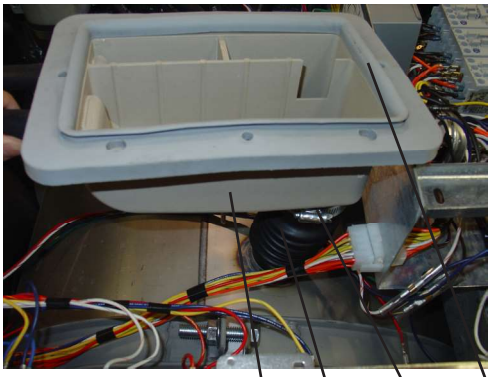
16
18
19
17

FABRIC SOFTENER
DETERGENT
BLEACH
55 dispenser lid

23
20
24
25
26
21

flow restrictors
installed here
21

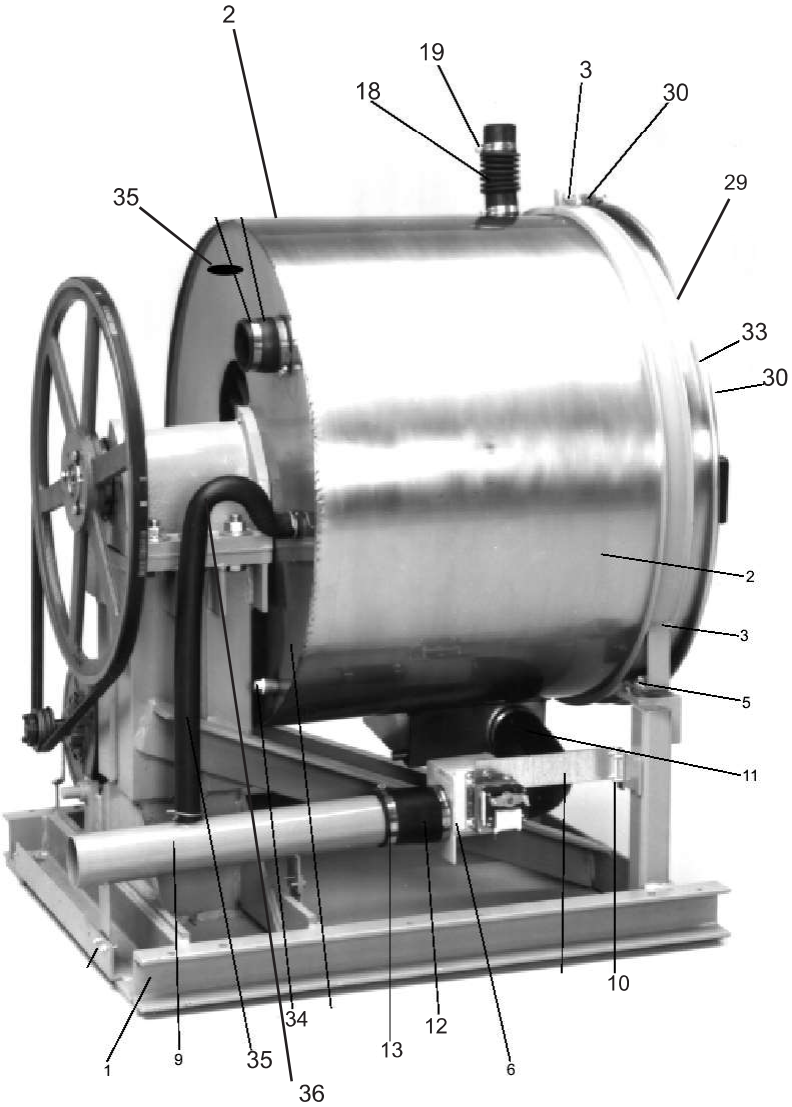
2
19
3
18
30
29
35
33
30
2
3
5
11
10
1
9
35
34
36
13
12
6

CHASSIS AND DRAIN GROUP 55lb. ,75lb.

Key	Part Number	Description	
1	9945-105-002	Base Assy, Frame WCVD-55	1
1	9945-125-002	Base Assy, Frame WCVD-75	1
2	9930-138-001	Outer Tub Assy WCVD-55	1
2	9930-144-001	Outer Tub Assy WCVD-75	1
3	9950-053-002	Ring Assy, Tub Mtg-Front WCVD-55, WCVD-75	1
4	9545-017-013	Screw Hexhead 1/2 x 2 WCVD-75,WCVD-55	1
4	8640-417-005	Nut Whizlok WCVD-75	1
4	8640-417-002	Nut Hex, 1/2 -13 WCVD-55	3
4	8641-582-016	Lockwasher Exttooth 1/2” WCVD-55	3
5	9545-017-013	Bolt, 1/2-13x2, Grd 5 Tub to Base WCVD-75, WCVD-55	2
5	8641-581-026	Washer, Flat WCVD-55	2
5	8641-581-026	Washer, Flat WCVD-75	4
5	9552-013-001	Shim, Thin	4
5	9552-013-002	Shim, Thick	4
6	9379-187-001	Valve, Drain 3” OD WCVD-55,WCVD-75	1
9	9915-126-002	Tube Assy, Drain WCVD-75	1
9	9915-120-002	Tube Assy, Drain WCVD-55	1
10	9545-030-002	Screw, Tube Mtg	2
11	9242-459-001	Hose, Tub to Drain Valve	1
12	9242-457-001	Hose, Drain Valve to Tube WCVD-55,WCVD-75	1
13	8654-117-014	Clamp, Hose	5
*	9610-001-001	Vacuum Breaker WCVD-55, WCVD-75	1
*	9029-069-001	Bracket, Vacuum Breaker WCBVD-55, WCVD-75	1
*	9545-008-026	Screw #10Bx 1/2	4
*	8654-117-001	Clamp	4
16	9732-108-002	Dispenser WCVD-55,	1
16	9475-002-002	Flow restrictor (All except 75)	2
17	9475-002-003	Flow restrictor WCVD-75	3
17	9206-416-001	Gasket, Dispenser WCVD-55	1
18	9242-450-001	Hose, Dispenser to Tub WCVD-55	1
19	8654-117-008	Clamp, Dispenser Hose WCVD-55	2
20	9807-091-001	Soap Box Assembly Complete SS WCVD-75	1
21	9206-425-001	Soap Box mounting Gasket WCVBD-75	1
22	9987-104-001	Lid Assembly soap box WCVD-75	1
23	9545-012-017	Lid screws #10-32x1/2 SS WCVD-75	1
24	8640-413-006	Nut Hex Elasticstop #10-32 SS WDCV-75	4
25	9538-157-019	Spacer Plastic #10x1/2 WCVD-75	4
26	9029-148-001	Bracket Soap box mounting WCVD-75	1
27	9574-252-002	Softner siphon tube WCVD-75	1
28	9475-002-003	Flow restictors WCVD-75	3
29	9974-007-002	Front Ass'y, Tub WCVD-55, WCVD-75	1
30	9950-055-001	Ring Ass'y, Clamp (tub front to outer tub) WCVD-55,WCVD-75	1
31	9545-029-009	Screw, 3/8-16x3 WCVD-55, WCVD-75	1
32	8640-415-001	Nut, Hex 3/8-16 WCVD-55, WCVD-75	1
33	9206-421-002	Gasket, Tub Front WCVD-55, WCVD-75	1
34	8615-104-039	Pipe Plug WCVD-55, WCVD-75	2
35	9242-449-003	Hose, Overflow WCVD-55, WCVD-75	1
36	8654-029-000	Clamp, Hose WCVD-55, WCVD-75	2

* Not Illustrated

CHASSIS AND DRAIN GROUP 18LB.,25LB.,40LB.

Key	Part Number	Description	
1	9945-097-002	Base Assy, Frame WCVD-40	1
1	9945-093-002	Base Assy,Frame WCVD-18	1
1	9945-105-002	Base Assy, Frame WCVD-55	1
1	9945-087-002	Base Assy,Frame WCVD-25	1
2	9930-136-001	Tub Assy WCVD-40,	1
2	9930-135-001	Tub Assy WCVD-18	1
2	9930-137-001	Tub Assy WCVD-25	1
2	9930-138-001	Tub Assy WCVD-55	1
*	9869-006-001	Tub & Cylinder Assy WCVD-18	1
*	9869-008-001	Tub & Cylinder Assy WCVD-25	1
*	9869-007-001	Tub & Cylinder Assy WCVD-40	1
*	9869-009-001	Tub & Cylinder Assy WCVD-55	1
3	9967-009-002	Cradle Assy, Tub WCVD-40	1
4	9950-050-002	Ring Assy, Tub Mtg-Front WCVD-40	2
5	9545-060-003	Bolt, Top Front Ring 5/8” x 3” WCVD-40	1
5	8640-425-001	Nut WCVD-40	1
5	8641-582-018	Lockwasher WCVD-40	1
6	9545-060-002	Bolt,5/8 x 2 1/2 Frnt Rng to Crdl (double nuts used) WCVD-40	2
6	8640-425-001	Nut, Hex WCVD-40	4
7			
7	9950-041-004	Ring Assy.Clamp Tub Mtg.- Rear	2
8	9545-060-001	Bolt, 5/8 x 1 1/2 Rings to Base (front and rear)	4
8	8641-582-018	Lockwasher	4
8	8640-425-001	Nut, Hex 5/8-11	4
9	9379-187-001	Valve, Drain	1
10	9029-052-001	Bracket, Drain Valve	1
*	9545-048-001	Screw, Valve to Bracket 12ABx1/2	1
*	8641-581-018	Washer	1
11	9545-030-002	Screw, Bracket to Base 1/4Bx3/4	2
12	9915-118-002	Tube Assy, Drain	1
13	9545-030-002	Screw, Tube Mtg	2
14	9242-456-001	Hose, Tub to Drain Valve	1
15	9242-457-001	Hose, Drain Valve to Tube	1
16	8654-117-014	Clamp, Hose	4
17	9552-038-001	Shim, Support Assembly (thin)	AR
18	9242-458-002	Hose, Vacuum Brkr. to Tub	1
19	9610-001-001	Vacuum Breaker	1
20	9029-077-001	Bracket, Vacuum Breaker	1
21	9545-008-026	Screw #10Bx 1/2	4
*	9732-108-002	Dispenser,	1
*	9206-416-001	Gasket, Dispenser	1
*	8640-399-007	Nut Spring	4
*	9242-450-001	Hose, Dispenser to Tub	1
*	8654-117-008	Clamp, Dispenser Hose	2
27	9732-137-003	Back Ass'y, Tub	1
28	9991-056-002	Support Arm Ass'y, Bearing Housing	6
29	9545-059-002	Bolt, 7/16” x 2" Tub Back to Tub	12
29	8640-416-005	Nut, Flange Lock	12
*	9552-038-003	Shim (thick)	AR

* Not Illustrated

9
16
10
14

20
19
16
18

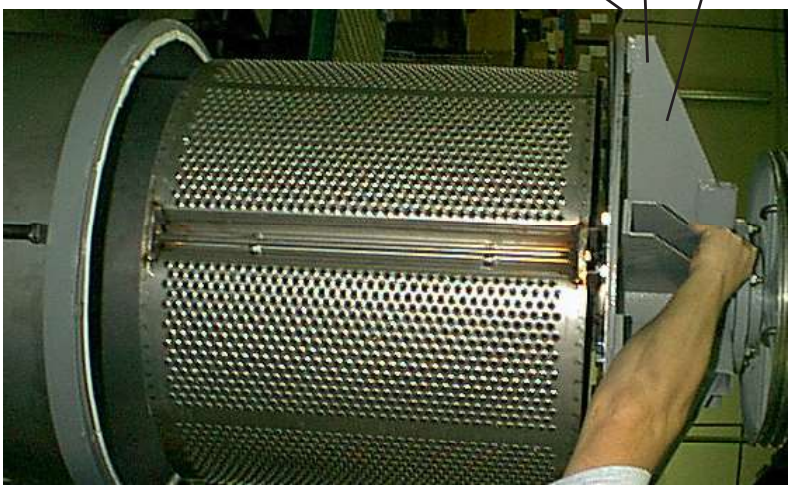
2 ALL
29
28

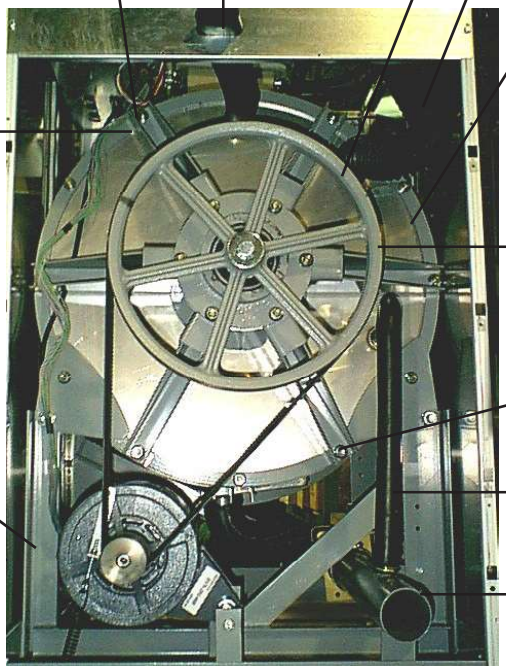
vent
hose
29
18
7
28
pulley
29
1
14
12

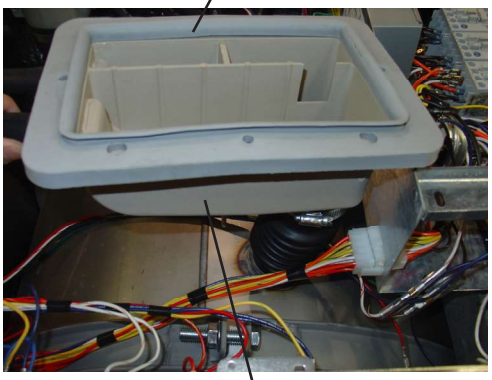
dispenser gasket
dispenser

7,8 & 10
22
HOT
WARM
WARM
COLD
Heavy Duty
Normal Wash
Permpress Nylon
Wool Delicate
2.50
TIME REMAINING

1
16
DISPENSER
MODE LIGHTS
(Optional) Add fabric softener
Add Bleach
Add detergent
ON
WASH
RINSE
FINAL RINSE
DEXTER
COMMERCIAL WASH
19
22

22
24
MADE IN USA

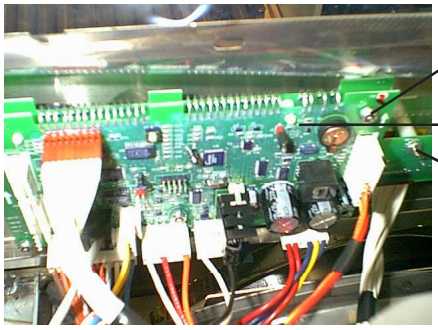
18
11
9

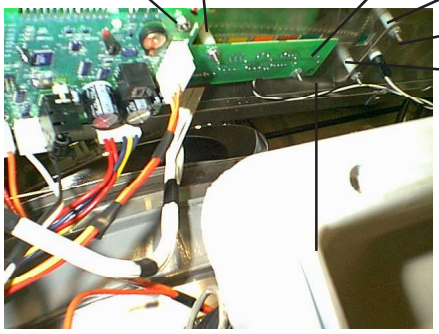
18
17
22
16
12
9
20

post
locator

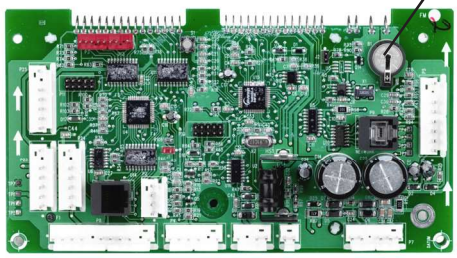
23

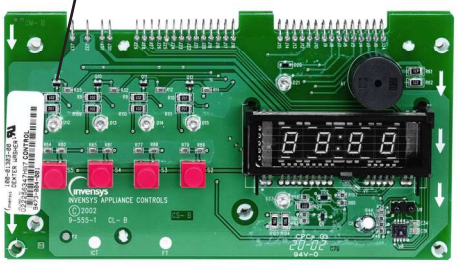
11
invensys
INVENSYS APPLIANCE CONTROLS

CONTROL PANEL GROUP

WCVD-75, WCVD-55 , WCVD-40 ,WCVD-25 ,WCVD-18-10 , WCVD-18-12

Key	Part Number	Description	
1	9989-473-001	Panel Control Assembly(panel only)WCVD-18-10,WCVD-18-12	1
1	9989-474-001	Panel Control Assembly (panel only) WCVD-25	1
1	9989-475-001	Panel Control Assembly (panel only) WCVD-40	1
1	9989-476-001	Panel Control Assembly (panel only) WCVD-55,WCVD-75	1
*	9545-008-026	Screw, Hxwshrhdundct #10Bx 1/2”	4
*	9467-024-001	Post Locator Top of panel	2
*	8640-411-003	Nut Hexkeps #6-32	2
*	9355-001-001	Locator Panel	2
*	9545-008-023	Screw FillHDCR 10Bx1/2”	2
7	9538-178-001	Spacer Pushbutton (Micro)	1
8	9486-150-001	Retainer Pushbutton (Micro)	1
9	8640-424-002	Nut Hexelasticstop #4-40	2
10	9035-060-001	Pushbutton Control (coin)	1
2	9185-008-001	Filler Pushbutton Control	4
11	9473-004-001	PCB assembly Control /Display	1
12	9538-157-018	Spacer Plastic #6x9/16	5
13	8640-411-003	Nut Elasticstop #6-32	5
14	9627-797-001	Harness LEDPCB	1
15	9627-791-003	Harness Doorlock WCVD-18,WCVD-25	1
15	9627-791-004	Harness Doorlock WCVD-40,WCVD-55,WCVD-75	1
16	9473-004-001	PCB assembly Mode lights	1
17	9538-157-018	Spacer Plastic #6x9/16	2
18	8640-411-003	Nut Hexkeps #6-32	2
19	9794-001-001	Light, LED,ADD BLEACH Assembly	1
20	9538-157-018	Spacer Plastic #6x9/16	2
21	8640-411-003	Nut Hexeps #6-32	2
*	9732-122-001	Kit, Coin Box W/Hardware	1
22	9412-114-001	Nameplate, Control Panel (one piece) WCVD-40	1
22	9412-113-001	Nameplate,Control Panel (one piece) WCVD-25	1
22	9412-112-001	Nameplate,Control Panel (one piece) WCVD-18	1
22	9412-115-001	Nameplate,Control Panel (one piece) WCVD-55	1
22	9412-130-001	Nameplate,Control Panel (one piece) WCVD-75	1
*	9922-011-001	Solenoid Ass'y, Door Locking (see Door Lock Group for parts breakdown)	
*	8640-412-005	Hex Nuts (mounting solenoid assy. to control panel)	4
23	8612-001-001	Battery	1
24	9021-001-001	Coin Acceptor Single Complete w/Blocking	

Electrical Components - Top Compartment

Key	Part Number	Description
1	9857-154-001	Trough Assy, Controls (all parts below #2 - #43 & trough) WCVD-55
1	9857-151-001	Trough Assy,Controls(all parts below #2-#43 & trough) WCVD-25
1	9857-150-001	Trough Assy,Controls(all parts below #2-#43 & trough) WCVD-18-12
1	9857-149-001	Trough Assy,Controls(all parts below #2-#43 & trough) WCVD-18-10
1	9857-152-001	Trough Assy, Controls (all parts below #2 - #43 & trough) WCVD-40
1	9857-160-001	Trough Assy, Controls (all parts below #2 - #43 & trough) WCVD-75
2	9839-015-001	Trough only ALL 1
3	9545-008-026	Screw, Trough Sides ALL 4
4	8641-582-006	Lockwasher Exttooth #10 ALL 4
5	9003-270-001	Angle Support Trough WCVD-18,WCVD-25 1
5	9003-271-001	Angle Support Trough WCVD-40,WCVD-55 1
6	9545-008-026	Screw, Trough Bracket WCVD-18,WCVD-25,WCVD-40,WCVD-55 . 4
7	8711-004-001	Transformer, Control (Operating Voltage to 115 volts) ALL except 18-10- not use
9	9545-045-001	Screw, Mtg #8Bx1/4" 2
10	8641-582-005	Lockwasher 2
11	8220-001-282	Wire Assembly Red 20" WCVD-18, WCVD-25 2
11	8220-062-025	Wire Assembly Red 28" WCVD-40, WCVD-55 2
11	8220-062-032	Wire Assembly Red 41" WCVD-75 2
12	8639-621-007	Screw GRN. #10-32x 1/2" 1
13	8641-582-006	Lockwasher #10 1
14	8652-130-037	Lug, Grounding 1
15	9473-006-001	PCB assembly Relay Main .....
16	9538-157-011	Spacer Plastic #8x3/8" 6
17	8640-411-003	Nuts Hexkeps #6-32 6
*	9627-796-001	Harness Drain/Therm/Sol WCVD-18,WCVD-25 1
*	9627-796-002	Harness Drain/Therm/Sol WCVD-40,WCVD-55,WCVD-75 1
19	9627-795-001	Harness P19/Water Valve WCVD-18,WCVD-25 1
19	9627-795-002	Harness P19/Water Valve WCVD-40,WCVD-55,WCVD-75 1
*	9627-794-001	Harness P8/P16 ALL 1
*	9627-793-001	Harness P20/P21 ALL 1
*	8220-064-023	Wire Assembly Yel 32" WCVD-18,WCVD-25,WCVD-40,WCVD-55 ... 2
*	8220-064-040	Wire Assembly Yel 64" WCVD-75 2
23	9053-067-002	Bushing , Wire 7/8 ALL 2
*	9527-002-002	Standoff Twistlock ALL 3
*	9527-002-003	Standoff Twistlock ALL 2
26	9483-004-002	Dynamic Braking Resistor WCVD-18-10,WCVD-18-12, ... 1
26	9483-004-002	Dynamic Braking Resistor WCVD-25,WCVD-40, ... 2
26	9483-004-003	Dynamic Braking Resistor WCVD-55, WCVD-75 2
27	9545-012-008	Screws #10-32x1/2" (pnhdcr) 4
28	8640-413-002	Nuts, #10-32 UNF 2B 4
29	8220-117-001	Wire Assembly Jumper Blk. ALL except wcvd-18 2
29	8220-118-001	Wire Assembly Jumper BLK. WCVD-18 2
30	9545-044-006	Screw #6-32x5/16" 4
31	8640-411-003	Nuts Hex #6-32 4
32	9897-034-001	Terminal Block Assy, POWER ALL 1
33	9545-045-007	Screw, Mtg 8Bx3/8" 2
*	9558-027-001	Strip, Terminal Marker WCVD-18,WCVD-40,WCVD-55,WCVD-75 ... 1
*	9558-027-002	Strip, Terminal Marker WCVD-25 1
35	9539-457-002	Switch, Pressure WCVD-18 1
35	9539-457-001	Switch, Pressure WCVD-40,WCVD-25,WCVD-55 1
35	9539-488-001	Switch, Pressure WCVD-75 1
36	9545-045-001	Screw, Mtg #8Bx1/4" WCVD-18,WCVD-25,WCVD-40 2
36	9545-008-026	Screw, Mtg. WCVD-55, WCVD-75 2

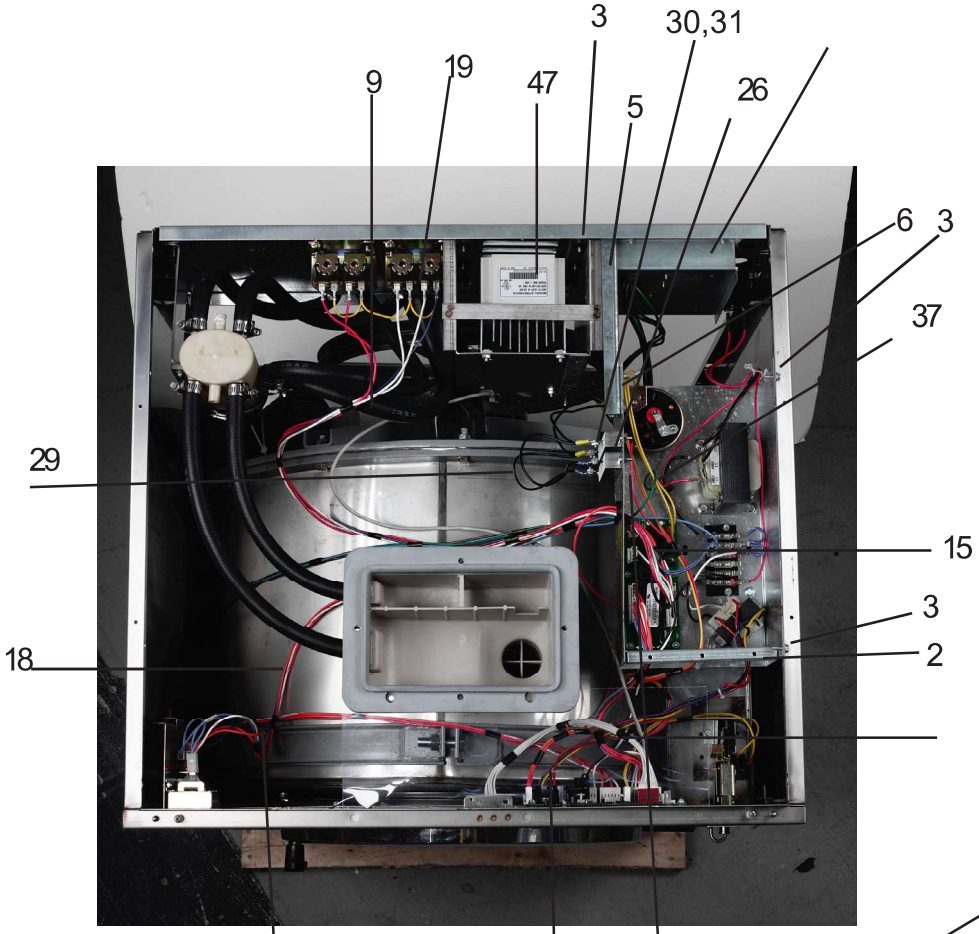
3
30,31
9
19
47
5
26
6
3
37
29
15
3
18
2
18
37
27,28

DELTA
FAN
+Ev
I1
I2
I3
Enable
47

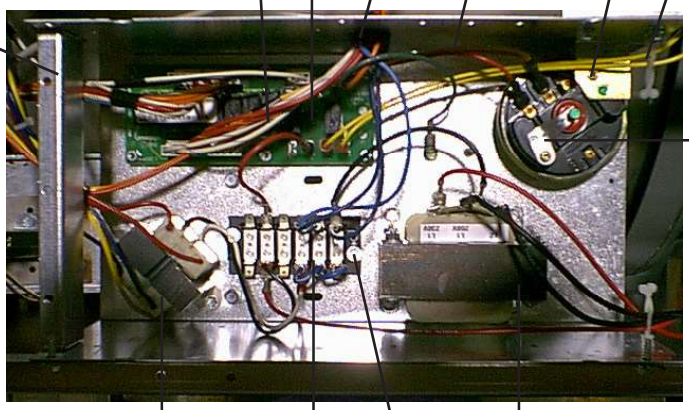
1
36
15
23
19
37
22
2
35
38
32
33
7

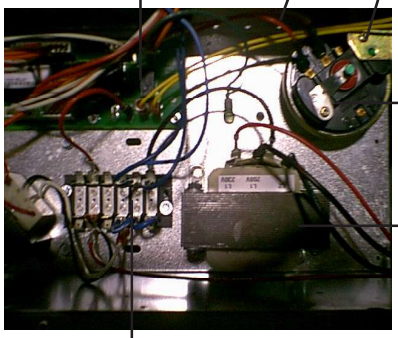
36
15
37
35
7
32

Electrical Components - Top Compartment CON'T

Key	Part Number	Description	
37	9627-800-001	Harness P5/Pressure WCVD-18	1
37	9627-801-001	Harness P5/Pressure WCVD-25	1
37	9627-803-001	Harness P5/Pressure WCVD-55,WCVD-75	1
37	9627-802-001	Harness P5/Pressure WCVD-40	1
38	8711-009-001	Transformer, (Step Down) 120/2.3 VAC&24 VAC ALL	1
39	9545-008-026	Screw, Transformer Mtg #10Bx1/2"	4
40	8641-582-006	Lockwasher #10 exttooth	4
*	8220-001-231	Wire Assembly BLK/Blu	1
*	9631-381-018	Wire Assembly Red 7"	1
*	8220-090-009	Wire Assembly Blu/Wht	1
47	9375-007-003	Variable Frequency Drive WCVD-40	1
47	9375-009-002	Variable Frequency Drive WCVD-55	1
47	9375-007-002	Variable Frequency Drive WCVD-25	1
47	9375-005-002	Variable Frequency Drive WCVD-18-12	1
47	9375-004-002	Variable Frequency Drive WCVD-18-10	1
47	9375-009-005	Variable Frequency Drive WCVD-75	1
*	9897-033-002	Terminal Block Assembly	1
*	9545-031-010	Screw 6ABx3/4	2
*	9627-747-003	Wiring Harness Power Terminal WCVD-25,WCVD-40	1
*	9627-747-002	Wiring Harness Power Terminal WCVD-55, WCVD-75	1

WASHER PREVENTIVE MAINTENANCE (PM) REQUIREMENTS

MAKE SURE ALL POWER IS DISCONNECTED BEFORE MAKING CHECKS INSIDE MACHINE.

DAILY

1. Check that the door remains securely locked during the entire cycle.
2. Clean the cabinet top around soap dispenser.
3. Clean the soap dispenser and soap lid and check that all dispenser-mounting screws are in place and tight.
4. Check the drain for leaking and proper draining.
5. Check the water connections for leaks.
6. Check door seal for foreign material.
7. Leave the loading door open to aerate the washer when not in use.

QUARTERLY

1. Check the drive belt for wear and proper tension.
2. Clean lint and other foreign material from around drive motor.
3. Remove water inlet hose filter screens and clean or replace as necessary.
4. Check all electrical components for moisture and wipe away any foreign debris.

ANNUALLY

1. Clean and remove lint and foreign debris from outside cover of VFD with a dry clean rag or dry brush.
2. Inspect all wire connections especially at relays, terminal connections and circuit boards for tightness.
3. Inspect and check tightness of mounting bolts that mount washer frames to floor.

AFTER ANY SERVICE REINSTALL ALL PANELS AND SAFTEY SCREENS BEFORE RECONNECTING POWER

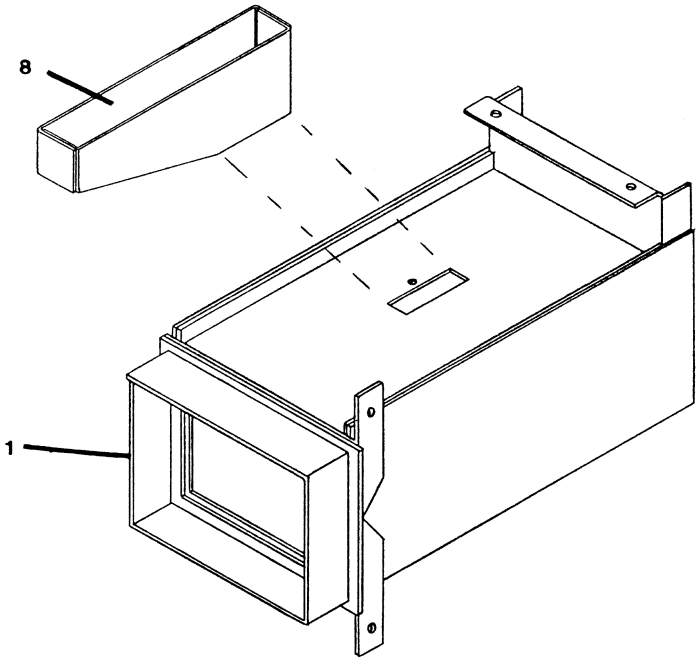
8
1

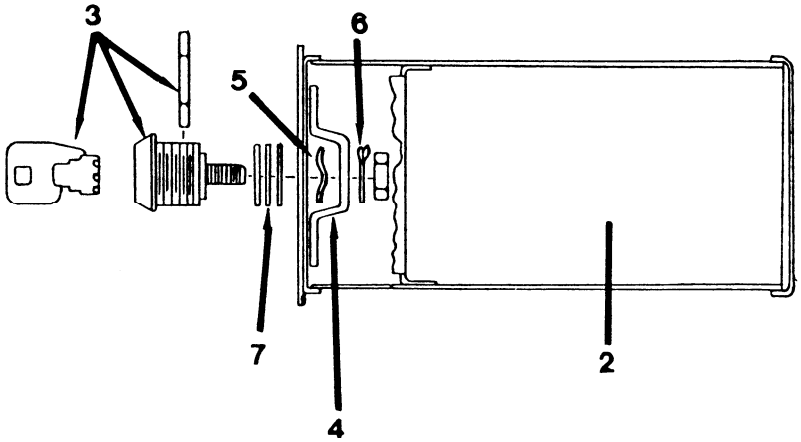
3
6
5
7
2
4

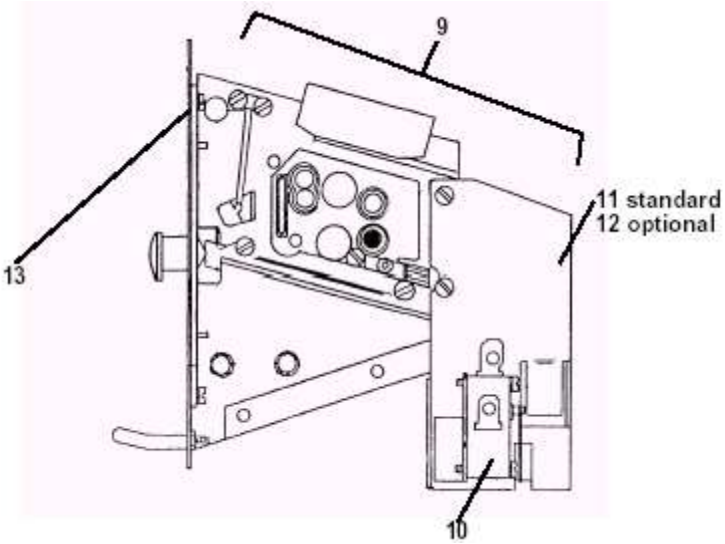
9
13
11 standard
12 optional
10

14 & 15
9
MADE
USA

COIN HANDLING GROUP

WCVD-18, WCVD-25, WCVD-40, WCVD-55, WCVD-75

Key	Part Number	Description	
1	9942-029-001	Vault, Assy WCVD-18	1
1	9942-030-001	Vault, Assy WCVD-25	1
1	9942-030-002	Vault, Assy WCVD-40	1
1	9942-030-003	Vault, Assy WCVD-55	1
1	9942-030-004	Vault, Assy WCVD-75	1
*	9545-008-026	Screw, 10Bx 1/2" Vault Mtg	2
*	9545-008-031	Screw, 10AB x 1/2" Vault Mtg	2
8	9119-028-001	Chute Assy.WCVD-75	1
8	9119-029-001	Chute Assy.WCVD-18,WCVD-25,WCVD-40,WCVD-55	1
	NOTE: COIN BOX AND HARDWARE KIT AND COIN BOX LOCK NOT INCLUDED WITH MACHINE.		
2	9732-122-001	Kit, Coin Box W/Hardware (includes 3 thru 6)	1
3	9349-033-001	Latch, Coin Box	1
4	8641-569-002	Washer, Wave	1
5	8641-583-001	Washer, Keeper	1
6	8641-581-008	Washer, Spacer- Thick	2
6	8641-581-010	Washer, Spacer- Thin	4
7	8650-012-003	Lock, Coin Box (w/key not included with 9732-122-001)	1
*	9545-008-001	Screw, Chute Mtg	1
11	9119-025-002	Coin Acceptor chute without penny rejector (standard)	1
*	8640-424-002	Nut	4
10	9732-126-001	Switch, Coin (fits single coin drop)	1
12	9119-025-001	Coin Acceptor chute with penny rejector (optional)	optional
13	9486-133-001	Button Coin Return Retainer	1
*	9922-008-001	Coin Blocking Solenoid assy (** included)	1
**	9536-079-001	Solenoid coin blocking	1
**	9534-362-001	Spring coin blocking	1
**	9545-039-001	Screw,Blocking assy mtg.	2
**	8641-579-001	Lockwashers	2
9	9021-001-001	Coin Acceptor Complete w/coin blocking solenoind	1
	9732-001-001	Electronic Acceptor Kit for U.S.A. models w/coin blocking For other countries coinage call Dexter P&S. Or contact your local distributer.	
14	9545-020-004	Screws - Coin Acceptor Mounting Torx Head	4
15	8640-424-002	Nuts - Coin Acceptor Mounting Nuts	4

* Not Illustrated