DEXTER®
LAUNDRY

USE THE BLUE TABS LOCATED ON THE RIGHT AND LEFT SIDES OF THE FOLLOWING DOCUMENT TO ADVANCE TO EACH SECTION.

C-Series Accessories

WC0900-XA12ECX 208-240 volts 60hz. Single Phase or Three Phase
WC01200-XA12ECX 208-240 volts 60hz Single Phase or Three Phase

Key	Description	T900	T1200	QTY
*	Hose, Water Supply 3/8" I.D. x 48"	9990-027-011	9990-027-011	2
*	Hose, Water Supply 5/8" I.D. x 48"	9990-027-013	9990-027-013	2
*	Washer, Inlet Hose (furnished)	8641-242-000	8641-242-000	2
*	Strainer, Inlet Hose (furnished)	9565-003-001	9565-003-001	2
*	Bevel Washer for 5/8" bolt used in installa-tions using angle iron bases	8641-586-002	8641-586-002	
*	Bevel Washer for 3/4" bolt used in installations using angle iron bases	8641-586-003	8641-586-003	4
*	Sealing compound	8538-151-001	8538-151-001	1
*	TORX#20	8545-051-002	8545-051-002	1
*	Special Tool For Removing Coin Acceptor Mounting Screws. (T-10 Torx)	8545-051-003	8545-051-003	1
*	Flow Restrictors (in dispenser)	9475-002-002	9475-002-003	2
*	Battery (used on Control PCB)	8612-001-001	8612-001-001	1
*	Special Tool for adjusting spacing between outer tub front and cylinder front	8545-056-001	8545-056-001	1
*	Clamps to hold tub front to outer tub when installing tub front	Vise Grip #11R	Vise Grip #11R	1
*	Coin Bearing & Seal Kit	9732-219-006	9732-219-006	1
	Key Service Lock (6324)	6292-006-007	6292-006-007	1
	USB, Thumb Drive (Blank)	9150-045-001	9150-045-001	1
	USB, Thumb Drive, W/File	9150-045-002	9150-045-002	1
*	Mode Light Backing Window	9635-022-001	9635-022-001	1
*	MS300 Display	9150-058-001	9150-058-001	1

Kits, Assemblies, & Common Parts

Coin Acceptor Components	Part Number
Optical Coin Acceptor	9021-092-002
Optical Coin Switch Replacement	9801-099-001
Coin Drop Screws	9545-053-002
Retainer, Coin Acceptor	9486-149-001
Loading Door & Door Lock Components	**Part Number**
Door Glass Gasket (Large Door)	9206-431-001
Door Glass Gasket (Standard Door)	9206-419-001
Door Handle Only (Large)	9244-091-001
Door Handle Only (Small)	9244-080-003
Door Close Switch	9539-492-001
Door Lock Gear Motor Assembly	9892-015-001
Kit - Door Latching Assy. & Cam (replaces original Door Latching Assembly)	9732-347-001
Kit - Door Cam Replacement	9732-346-002
Kit - Locking Pawl Replacement	9732-346-001
Kit - Door Gasket Expander Kit (Small)	9732-139-001
Kit - Door Gasket Expander Kit (Large)	9732-139-002
Electrical Components	**Part Number**
Transformer, Main	8711-004-001
Transformer, Control	8711-009-006
Main Control Board	9473-010-001
Kit-Replacement, Pressure Sensor (Only)	9732-315-001
VFD & Breaking Resistors Components	**Part Number**
Breaking Resistor 200 Ohms	9483-004-002
Breaking Resistor 160 Ohms	9483-004-003
Delta E Drive Display	9150-044-001
MS 300 VFD Display	9150-058-001
Data Cable (56")	9806-015-003
Drain & Water Valve Components	**Part Number**
Kit - 3" Drain Valve Seal Replacement	9732-327-001
Drain Valve 3"	9379-202-001
Water Valve (Dual)	9379-183-012
Water Valve (Single Mueller)	9379-194-001
Diaphragm (Dual)	9118-049-003
Diaphragm (Single Mueller)	9118-055-001
Cabinet Components	**Part Number**
Front Panel Screw	9545-008-014
Front Panel Finisher Washer	8641-585-001
Front Panel Spring Nut	8640-399-008
Top Soap Box Screw (Regular Chassis Only)	9545-008-012
Top Soap Box Spring Nut (Regular Chassis Only)	8640-399-007
5/16 Hex Screw, Common	9545-008-026
Top Lock Key #6324	9306-025-001
Cylinder Plug (1.5" Plastic)	9456-041-007

Section 8:

Parts Data

C-Series Vended

Large Chassis

WC0900XA-12EC_X **After Serial # W1.19212.025**
WC1200XA-12EC_X **After Serial # W1.19217.001**

Wiring Harness Part # by Model

Key	Description	T-900	T-1200	QTY
Control Panel Wiring Harnesses				
*	Wiring Harness, Door Lock	9627-791-005	9627-791-005	1
*	Wiring Harness,Coin Drop Mech	9627-792-001	9627-792-001	1
*	Wiring Harness, Drain/Thermo/DoorSol	9627-796-002	9627-796-002	1
*	Wiring Harness, Relay board to Control Board (P20/P21)	9627-793-001	9627-793-001	1
*	Wiring Harness, LED PCB Board to Control Board	9627-797-001	9627-797-001	1
*	Wire Assembly, Door Switch Extension (BLK. 23” #8)	8220-117-002		
*	Cable Assembly, USB	9806-022-001	9806-022-001	1
Control Trough Wiring Harnesses				
*	Wiring Harness, Control Board (P5) to Pressure Switch	9627-908-011	9627-908-013	1
*	Wiring Assembly, Fuse (Red 7” #36)	9631-381-018	9631-381-018	3
*	Wiring Assembly, Terminal Block to Control Transformer (Blk/Blu)	8220-001-231	8220-001-231	1
*	Wiring Harness, Control Board to Relay Board (P8/P16)	9627-794-001	9627-794-001	1
*	Wiring Harness Water Valve to Relay Board (P19)	9627-795-004	9627-795-004	1
*	Harness, Power Terminal Block	9627-747-003	9627-747-002	1
Rear Channel Wiring Harnesses				
*	Wiring Assembly, Relay Board to VFD (Yel. 32”)	8220-064-023	8220-064-023	2
*	Wire, Yellow Jumper (Water Valve)	8220-123-001	8220-119-002	1
*	Data Communication Cable	9806-025-001	9806-025-003	1

Cabinet and Front Panel Group Part # by Model

Key	Description	T900	T1200	QTY
1	Panel, Side (Left or Right) - stainless	9732-359-002	9732-359-003	4
*	Strap Assembly (side panel)	9966-012-001	9966-012-002	2
*	Shim (side panel)	9552-039-001	9552-042-001	2
*	Nut, Hex 1/4-20 UNC (for strap assembly	8641-414-006	8641-414-006	8
2	Bracket, Side Panel under front panel	9046-085-001	9046-085-001	1
3	Screw #10Bx1/2 side panel brkt	9545-008-026		1
4	Nut 1/4-20 UNC side panel brkt	8640-414-006		1
•	Nut, Hex	8640-414-006	8640-414-006	2
*	Screw	9545-008-026	9545-008-026	2
5	Panel Assy, Front	9989-617-002	9989-618-002	1
*	Band, Edge Protector	9578-092-005	9578-092-005	1
6	Bumper Loading Door	9051-055-001	9051-055-001	1
*	Nut, 1/4 x 20 for bumper	8640-414-006	8640-414-006	1
*	Screw, Hex- To Control Panel	9545-008-026	9545-008-026	2
*	Nut, Spring- To Control Panel 10/32	8640-442-001	8640-442-001	2
7	Screw, Flat Head- Front to Sides	9545-008-014		2
7	Screw, Flat Head- Front to Sides		9545-008-014	4
8	Washer, Finish	8641-585-001		2
8	Washer, Finish		8641-585-001	4
*	Nut, Spring-To Front Panel	8640-442-001	8640-442-001	2
9	Label-Door Opening (Blue	8502-757-002	8502-757-002	1
9	Label-Door Opening (Black)	8502-757-001	8502-757-001	1
10	Label-Risk of Injury (Blue)	8502-759-002	8502-759-002	1
10	Label-Risk of Injury (Black)	8502-759-001	8502-759-001	1
11	Panel, Control (Mounts Nameplate)	9989-560-001	9989-560-001	1
*	Screw, Control Panel to Sides	9545-008-026	9545-008-026	4
12	Nameplate Decal, Control Blue	9412-206-002	9412-214-002	1
12	Nameplate Decal, Control Black	9412-206-001	9412-214-001	
13	Panel Top	9454-736-002		1
14A	Panel Top Front		9454-761-001	1
14B	Panel Top Rear		9454-762-001	1
15	Lock, Top (w/Key)	8650-012-003	8650-012-003	2
*	Key, Top- # 6324	6292-006-007	6292-006-007	1
*	Cam, Lock-Top	9095-049-001	9095-049-001	1
*	Nut, 9/32 - 28 Hex	8640-426-001	8640-426-001	1
*	Washer Flat 5/16	8641-581-008	8641-581-008	1
16	Door, Lower Service, Includes Handle	9960-286-004	9960-286-004	1

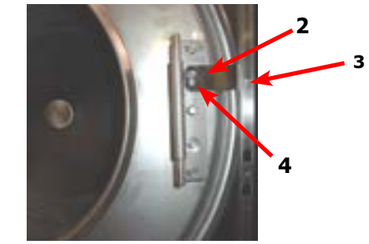

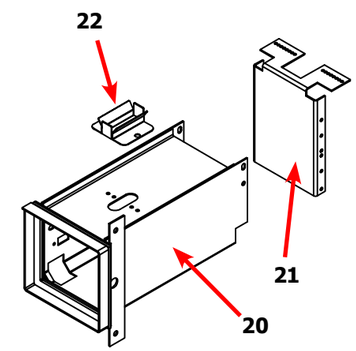

Key	Description	T900	T1200	QTY
17	Handle (bumper guard)	9244-086-003	9244-086-003	1
*	Rivet Blind 3/16" Alum	9491-009-003	9491-009-003	4
*	Screw	9545-008-023	9545-008-023	4
18	Screw Mtg., Flat Head 10Bx1 3/4	9545-008-014	9545-008-014	2
19	Washer, Finish	8641-585-001	8641-585-001	2
*	Nut, Spring	8640-442-001	8640-442-001	2
20	Coin Vault, Black	9942-040-002	9942-040-002	1
21	Back-Coin Vault	9050-066-001	9050-066-001	1
*	Screw, 10B x 1/2	9545-008-026	9545-008-026	8
22	Chute, Coin	9119-032-001	9119-032-001	1
*	Screw, Coin Schute	9545-008-001	9545-008-001	2
23	Coin Box assy, Large Blue	9807-099-002	9807-099-002	1
23	Coin Box assy, Large Black	9807-099-004	9807-099-004	1

Cabinet and Front Panel Group Part # by Model
Front Soap Dish

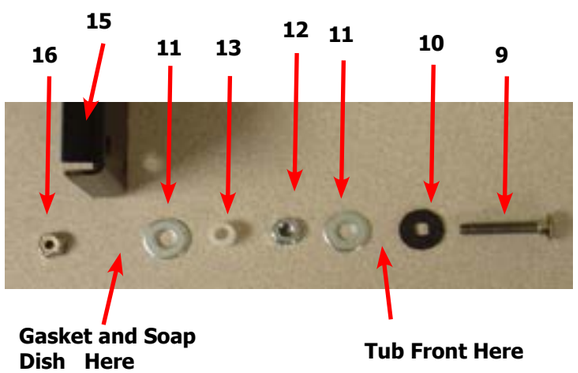

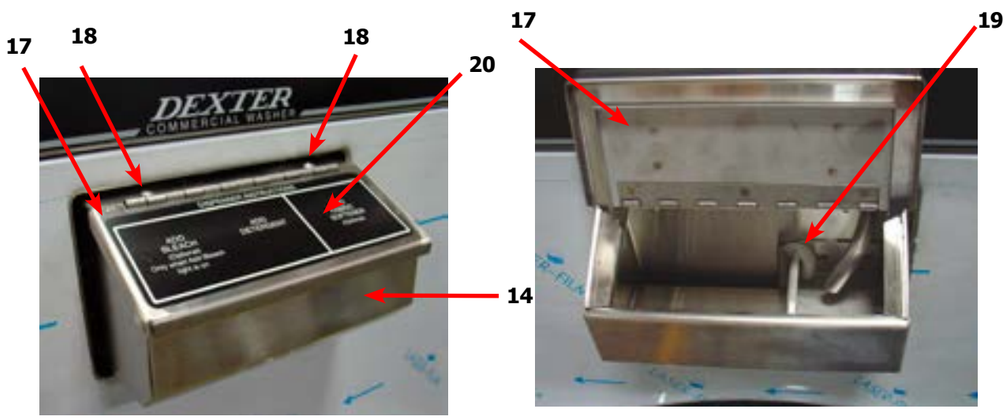

Key	Description	T900	T1200	QTY
*	Washer Flat 5/16	8641-581-008	8641-581-008	1
7	Screw, Locator	9545-008-023	9545-008-023	1
8	Plastic Sleeve, Locator	9355-001-001	9355-001-001	1
*	Catch, Top Panel	9086-017-001	9086-017-001	2
*	Lock, Top (w/Key)	8650-012-003	8650-012-003	2

Front Mount Detergent Dispenser

Key	Description	T900	T1200	QTY
9	Bolt,#10-32 x 1 1/4"SS	9545-012-026	9545-012-026	6
10	Special Washer, Rubber	8641-222-000	8641-222-000	6
*	Tub Front	9974-011-002		1
11	Washer-Flat, 1/4	8641-581-018	8641-581-018	12
12	Nut, #10-32UNF	8640-413-002	8640-413-002	6
13	Spacer Plastic #10x1/2	9538-157-022	9538-157-022	6
14	Soap Dispenser (no lid)	9807-087-001	9807-087-001	1
*	Det. Dispenser Mtg Gasket to Tub frnt	9206-425-001	9206-425-001	1
15	Bracket Soap box mounting	9029-122-002	9029-122-002	1
16	Nut Hex Elasticstop #10-32 SS mtg dispenser	8640-413-006	8640-413-006	6
17	Lid Assembly dispenser	9987-104-001	9987-104-001	1
18	Lid screws #10-32x1/2 SS	9545-012-017	9545-012-017	2
19	Softner siphon tube (plastic)	9574-252-002	9574-252-002	1
*	Flow restictors	9475-002-003	9475-002-003	AR
20	Washer Dispenser Label Blue	8502-756-002	8502-756-002	1
20	Washer Dispenser Label Black	8502-756-001	8502-756-001	1

Rear View Access Part # by Model

Key	Description	T900	T1200	QTY
1	Drive Motor, 3 Phase	9376-308-001	9376-329-001	1
2	Rod, Motor Mtg	9497-222-004	9497-222-004	1
3	Motor-Bushing, Support	9053-082-001	9053-082-001	2
4	Clamp for motor bushing	8654-117-019	8654-117-019	2
5	Pulley, Motor	9453-175-002	9453-175-002	1
5	Split TaperBushing (motor pulley)	9053-077-001	9053-077-001	2
*	Screw taper bushing 1/4-20x1	9545-018-024	9545-018-024	3
6	Bolt, Eye (1/4"-20x1/2")	9545-055-001	9545-055-001	1
*	Nut, 1/4 Elastic Stop	8640-414-003	8640-414-003	1
*	Link (open end)	9341-046-001	9341-046-001	1
7	Chain (Spring Tension)	9099-012-003	9099-012-004	1
8	Spring, Belt Tension	9534-369-001	9534-369-001	1
9	Pulley, Driven	9453-176-005	9453-176-005	1
10	Washer-Flat .675x2-1/2x1/4	8641-581-043	8641-581-043	1
11	Lockwasher-Exttooth, 5/8	8641-582-018	8641-582-018	1
12	Bolt, 5/8-11x1 1/2	9545-060-001	9545-060-001	1
13	Bushing Taperlock (Pulley)	9053-078-002	9053-078-002	1
14	Bolt, 3/8"-16 x 2"	9545-029-011	9545-029-011	3
15	Washer, 3/8"	8641-582-003	8641-582-003	3
16	Drive Belt	9040-079-002	9040-079-003	1
17	Hose, Overflow to drain	9242-449-003	9242-449-003	1
*	Clamp, Hose overflow to drain	8654-117-018	8654-117-018	2
18	Hose, Overflow Vent Top	9242-463-004	9242-463-004	1
*	Clamp, Hose Vent	8654-117-008	8654-117-008	1
*	Vaccum Breaker ALL	9610-001-001	9610-001-001	1
*	Clamp, Hose to Vacuum Breaker	8654-117-014	8654-117-014	2
19	Hose, Vacuum Breaker to tub	9242-458-003	9242-458-003	1
*	Vaccum Breaker Bracket	9029-077-001	9029-077-001	1
*	Inlet Cap	0935-135-001		2
20	Hose, Pressure Switch	9242-175-007	9242-175-004	1
*	Clamp, Pressure Switch Hose	8654-117-015	8654-117-015	1
21	Channel, Rear,	9947-028-001	9947-028-001	1
22	Screw #10Bx1/2	9545-008-026	9545-008-026	4
*	Nut, Spring	8640-399-004	8640-399-004	4
23	Cover, Terminal Block	9074-267-001	9074-267-001	1
*	Screw #10Bx1/2	9545-008-026	9545-008-026	1

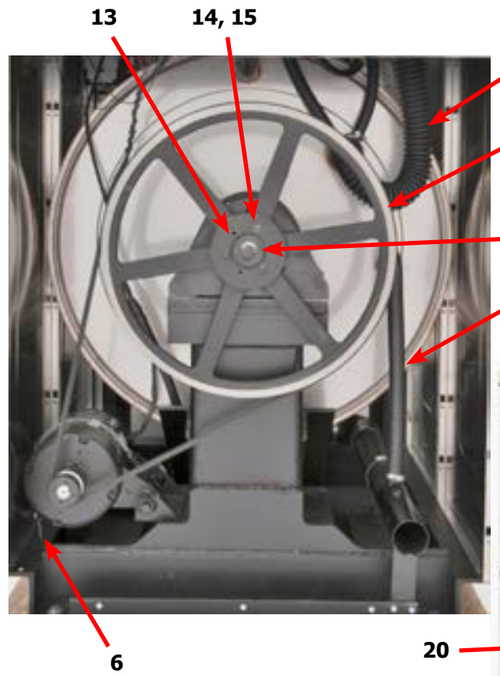

50 Lb. Pulley

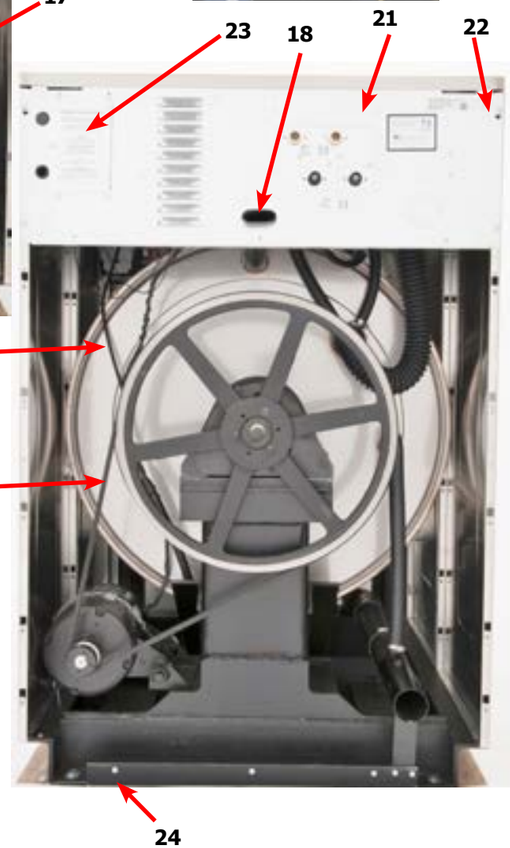

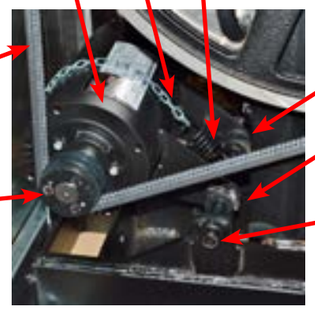

Key	Description	T900	T1200	QTY
*	Panel Assy., Back, Upper	9454-905-001	9454-905-001	1
*	Panel Assy., Back, Lower	9444-015-001	9989-904-001	1
*	Screw Panel Mtg.#10Bx1/2"	9545-008-026		9
*	Screw Panel Mtg.#10Bx1/2"		9545-008-026	13
*	Nut, Spring	8640-442-001	8640-442-001	AR
28	Screw, To Base-1/4" x 3/4"	9545-030-002	9545-030-002	3

Cylinder, Seals & Bearings Part # by Model

Key	Description	T900	T1200	QTY
*	Bearings and Seal Kit	9732-219-007	9732-219-007	1
*	Housing, Bearing- Assembly (items #2-#6)	9803-187-001	9803-187-001	1
2	Housing, Bearing	9241-181-004	9241-181-004	1
3	Bearing, Front (Small)	9036-159-006	9036-159-006	1
4	Bearing, Rear (Large)	9036-159-005	9036-159-005	1
5	Spacer, Bearing	9538-170-001	9538-170-001	1
6	Ring, Bearing Retainer	9487-238-004	9487-238-004	1
8	Seal, Small V85A	9532-140-007	9532-140-007	1
9	Seal, Large V140A	9532-140-008	9532-140-008	1
10	Ring, Seal Mounting	9950-052-001	9950-052-001	1
11	Tub Back Mating Ring	9487-261-004	9487-261-004	1
11G	Mating Ring Guard Shield	9950-054-004	9950-054-004	1
12	Bolt, Tub End of Bearing Housing (7/16-14x1), Bolt from inside Tub	9545-059-004	9545-059-004	6
13	Washer, Flat	8641-581-034	8641-581-034	6
14	Screw-Hex Cap, 3/4"-10 x 3" (Bearing Housing to Frame)	9545-057-002	9545-057-002	6
15	Washers Spherical 3/4 (Male half) (Bearing Housing to Frame)	8641-588-001	8641-588-001	6
16	Washers Spherical 3/4 (Female half) (Bearing Housing to Frame)	8641-588-002	8641-588-002	6
17	Nut 3/4"-10 (Bearing Housing to Frame)	8640-418-003	8640-418-003	6
18	Pulley, Driven	9453-176-005	9453-176-005	1
19	Bolt, 3/8"-16 x 2"	9545-029-011	9545-029-011	3
20	Washer, 3/8"	8641-582-003	8641-582-003	3
21	Bushing Taperlock (Driven & Large	9053-078-002	9053-078-002	1
22	Washer-Flat .675x2-1/2x1/4	8641-581-043	8641-581-043	1
23	Lockwasher-Exttooth, 5/8	8641-582-018	8641-582-018	1
24	Bolt, 5/8-11x1 1/2	9545-060-001	9545-060-001	1
25	Tub & Cylinder Assy	9869-027-001	9869-022-002	1
*	Cylinder Assy	9848-136-001	9848-137-001	1
*	Tub Front	9974-011-002	9974-011-002	1
*	Gasket, Tub Front	9206-421-002	9206-421-002	1
*	Ring Assy, Tub Mtg-Front Clamp	9950-055-001	9950-055-001	1
*	Bolt, Top Front Ring 3/8"-16 x 3"	9545-029-009	9545-029-009	1
*	Nut C Series 3/8"-16	8640-415-001	8640-415-001	1

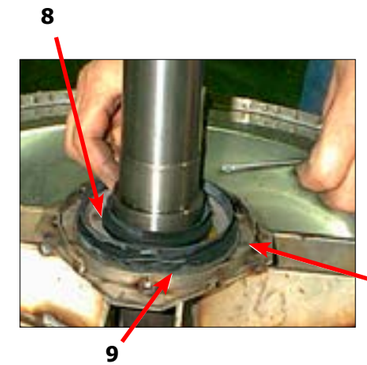

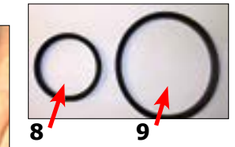

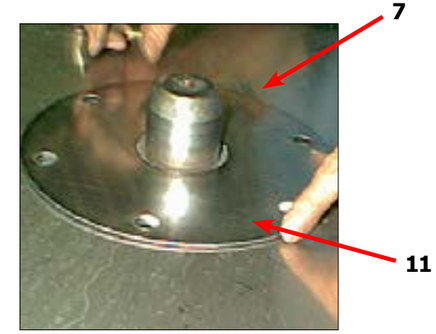

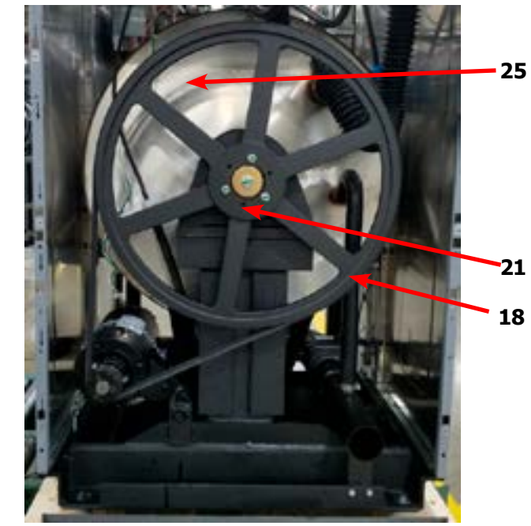

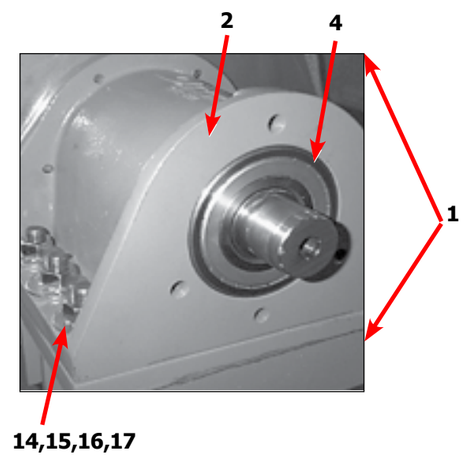

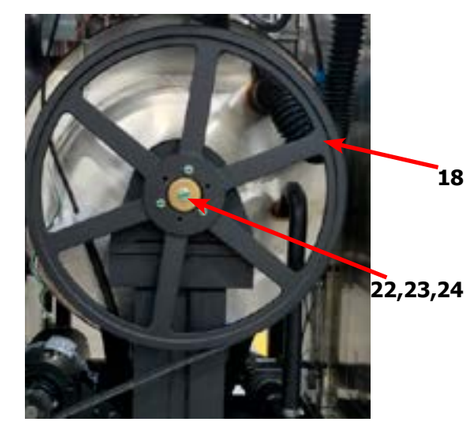

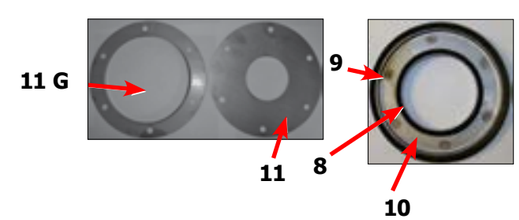

Door Latching Assembly (All Models)

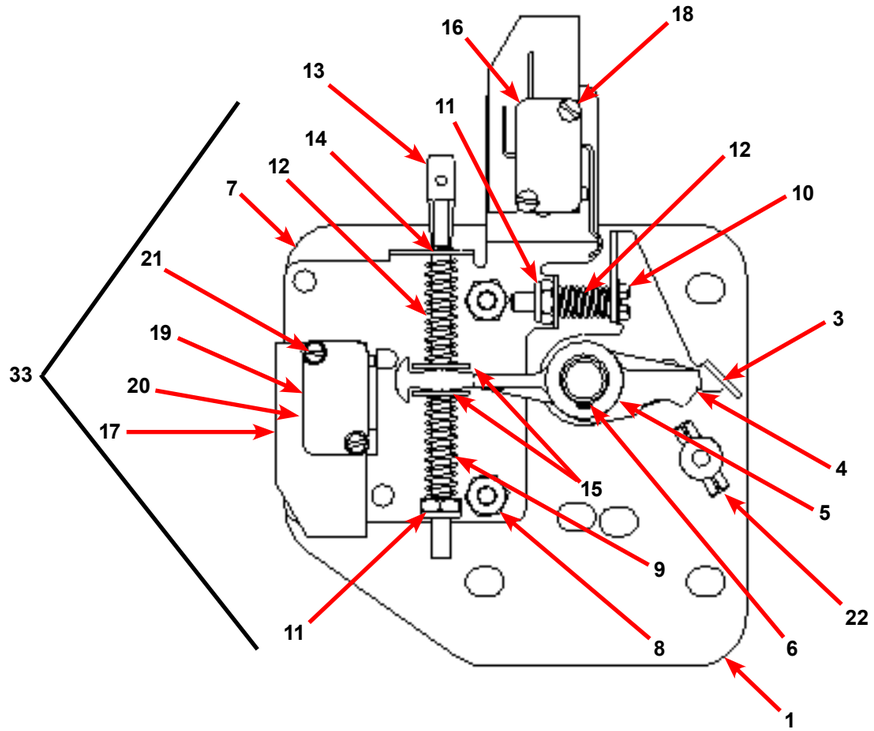

Key	Description	All Models	QTY
33	Latching Assy, Complete (includes #1 thru #22)	9885-024-001	1
1	Plate Assy, Door Lock	9982-346-001	1
2	Washer, Flat (SS or Brass)	8641-581-030	1
3	Actuator, Latching Switch	9008-005-001	1
4	Pawl, Locking	9732-346-002	1
5	Washer, Spring	8641-569-003	1
6	Ring, Retaining	9487-200-004	1
7	Bracket Switch	9029-163-001	1
8	Nut, Hex 10-32 UNF	8640-413-002	2
9	Spring, Actuating	9534-364-002	1
10	Screw, Hx. 10-32 x 1"	9545-012-020	1
11	Nut, Elastic Stop 10-32	8640-413-004	2
12	Spring, Return	9534-364-001	2
13	Pin, Guide	9451-193-001	1

Key	Description	All Models	QTY
14	Ring, Retaining	9487-200-005	1
15	Washer	8641-581-031	1
16	Switch, Latching Sensing	9539-461-008	1
17	Shield, Switch	9550-169-003	3
18	Screw 4-40 x 5/8"	9545-020-001	2
18	Nut, Twin 4-40	8640-401-001	1
19	Switch, Locking Sensing	9539-461-007	2
20	Actuator, Switch Locking	9008-006-003	1
21	Screw 4-40 x 1 1/8"	9545-020-003	2
21	Nut, Twin 4-40	8640-401-001	1
*	Spacer Sensor	9538-182-001	*
22	Pin, Dowel (for door cam)	9451-181-004	1
*	Shim, Door Lock, Thin	9552-037-001	AR
*	Screw, Lock mtg 1/4"-20 x 3/4"	9545-018-014	3
*	Lockwasher 1/4" Ext tooth	8641-582-007	3
*	Door Pin Stud, 3/16" x 3/4"	9451-181-004	1

Gear Motor Door Lock Assembly

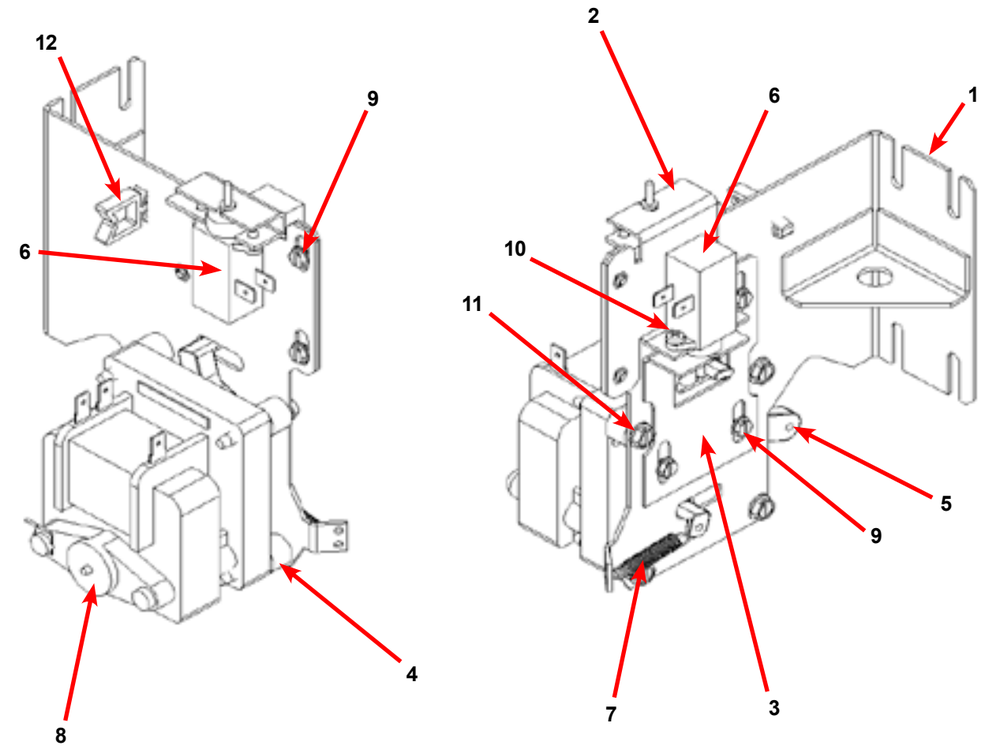

Key	Description	T900	T1200	QTY
*	Actuator Assembly (Includes 1-10, Rod NOT included)	9892-015-001	9892-015-001	1
1	Bracket Assy, Slide Lock Actuator	9985-190-001	9985-190-001	1
2	Bracket Assy, Slide - Unlock	9985-189-001	9985-189-001	1
3	Bracket Slide Lock	9029-204-001	9029-204-001	1
4	Spacer, Plastic	9538-157-021	9538-157-021	4
5	Arm - Door Lock	9001-063-001	9001-063-001	1
6	Thermoactuator - Door Lock Relay 120v	9586-001-001	9586-001-001	2
7	Spring - Extension	9534-350-001	9534-350-001	1
8	Motor & Gear Assembly 120v	9914-137-015	9914-137-015	1
9	Screw -Hxwshrhdslsems, 6-32 x 3/16	9545-044-003	9545-044-003	6
10	Cross Recessed PAn Hd Tapping screw	9545-031-011	9545-031-011	4
11	Screw hxwshdsl, 10-24 - 1.25f, ctd	9545-046-007	9545-046-007	4
12	Standoff-Wire	9527-007-001	9527-007-001	1
*	Rod, Door Lock	9497-225-015	9497-225-015	1
*	Harness, Door Lock/Drain, P17	9627-796-002	9627-796-002	1

Large Door & Hinge Group

Key	Description	T900	T1200	QTY
1	Door Hinge Assembly (mounts to tub front)	9955-031-001	9955-031-001	1
*	Door Assembly Complete	9960-310-001	9960-310-001	1
2	Door Ring 180 degree large hnge	9487-275-001	9487-275-001	1
3	Door Gasket	9206-431-001	9206-431-001	1
4	Door Glass Window	9635-020-001	9635-020-001	1
*	Red Wire (Door Close Switch)	8220-063-028	8220-063-028	1
*	Black Wire (Door Close Switch)	8220-063-029	8220-063-029	1
5	Switch, Door Hinge Close (Plunger)	9539-492-001	9539-492-001	1
6	Top Door Hinge Leaf	9845-006-001	9845-006-001	1
7	Bottom Door Hinge Leaf	9845-007-001	9845-007-001	1
8	Thrd Form Screw, Door Mtg 5/16" x 5/8"	9545-056-002	9545-056-002	4
9	Screw, Loading Door Hinge Mtg (5/16" x9/16" ss)	9545-014-013	9545-014-013	3
9	Washer, Star 5/16	8641-582-009	8641-582-009	3
10	Bracket Retainer support side panel	9046-085-001	9046-085-001	1
*	Shim Large door	9552-043-001	9552-043-001	1

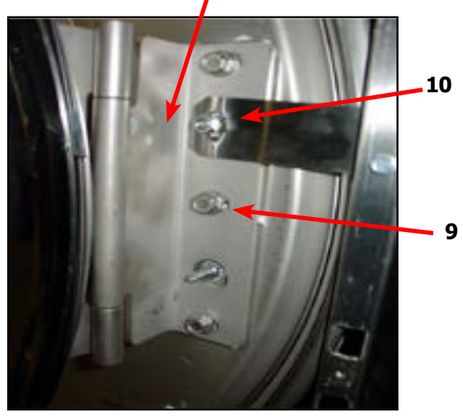

Key	Description	T-900	T-1200	QT
*	Shaft Assembly-Loading Door (11-14)	9913-136-001	9913-136-001	1
11	Shaft, Door Locking	9537-195-002	9537-195-002	1
12	Cam, Locking	9095-051-001	9095-051-001	1
13	Pin, Groove (1 1/4)	9451-181-005	9451-181-005	1
14	Pin, Groove (3/4)	9451-181-004	9451-181-004	1
15	Spring, Lock Cam	9534-360-002	9534-360-002	1
16	Handle, Door	9244-091-001	9244-091-001	1
17	Pin, Door Handle (groove)	9451-181-005	9451-181-005	1
18	Trim, Edge	9578-092-002	9578-092-002	1

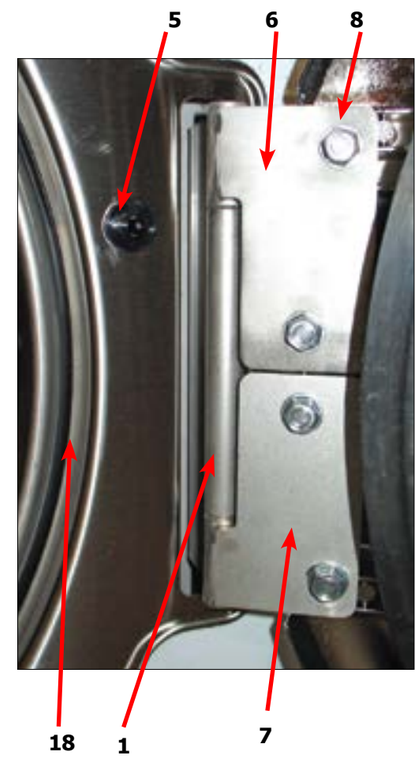

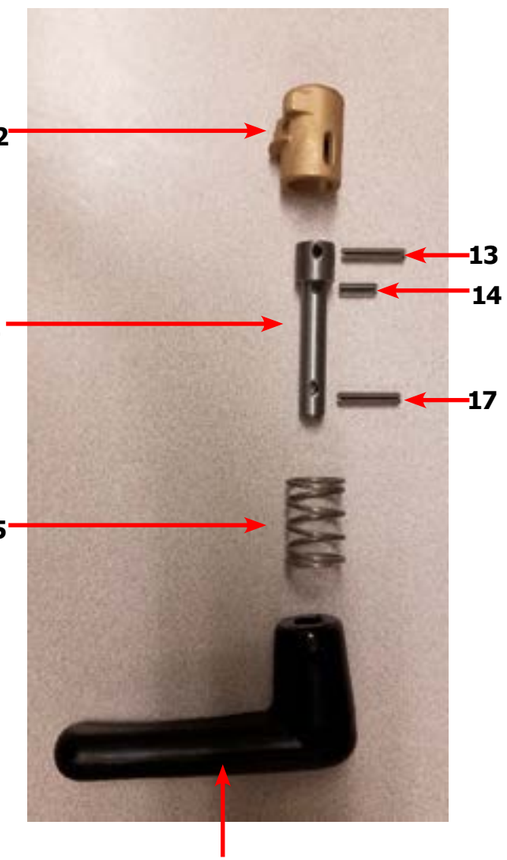

Water Inlet & Rear Channel

Key	Description	T900	T1200	QTY
1	Channel Assembly, Rear	9497-028-001	9497-028-001	1
*	Screw, #10B x 1/2	9545-008-026	9545-008-026	4
*	Clip, Spring	8640-399-004	8640-399-004	4
2	Mounting Plate Water Valves	9452-814-001	9452-814-001	1
3	Nut-Elastic stop, #10-32	8640-413-002	8640-413-002	2
4	Valve, Water Inlet (dual outlet) (see Water Inlet Valve Breakdown for individual parts)	9379-183-010	9379-183-010	2
5	Screw, Valve Mtg	9545-008-026	9545-008-026	4
6	Plate-Cover, Valves	9452-794-001		1
7	Screw, #10B x 1/2	9545-008-026		1
8	Valve, Water Inlet (Single outlet) (see Water Inlet Valve Breakdown for individual parts)		9379-194-001	2
*	Screw, M4x0 7 x 8mm		9545-064-001	4
*	Wire-Assy, Jumper, Yellow	8220-123-001	8220-119-002	1
9	Shield over Water Valves Plastic	9550-195-001	9550-195-001	1
10	Push Clip	9083-121-001	9083-121-001	3
11	Vacuum Breaker	9610-001-001	9610-001-001	1
12	Vacuum Breaker Cap (Red)	0935-135-002	0935-135-002	3
*	Bracket, Vacuum Breaker	9029-077-001	9029-077-001	1
13	Screw, #10B x 1/2	9545-008-026	9545-008-026	4
*	Clamp, Hose to Vacuum Breaker	8654-117-014	8654-117-014	1
*	Hose, Vacuum Breaker to Tub	9242-458-003	9242-458-003	1
*	Clamp, Tub End	8654-117-009	8654-117-009	1
*	Hose, overflow Suds	9242-463-004	9242-463-004	4
*	Clamp, Hose-Spring (overflow to tub back)	8654-117-018	8654-117-018	2
14	Plate Assembly, Drive Mounting	9452-847-001	9452-847-001	1
15	Nut-#10-32UNF, 2B	8640-413-002	8640-413-002	4
16	VFD Delta drive 208-240 volt (CHECK PART NUMBER ON DRIVE BODY)	9375-036-004	9375-036-006	1
*	VFD Cooling Fan	9189-016-001	9189-016-001	1
*	VFD "E" Drive (C3) (CHECK PART NUMBER ON DRIVE BODY)	9375-028-014	9375-028-012	1
*	Wire assy Brown, 3"	8220-057-035	8220-057-035	1
*	Wire assy Red, 3"	8220-057-036	8220-057-036	1
*	Key Pad-Display Delta Drive	9150-058-001	9150-058-001	1
*	Cable-Data, Communication	9806-025-003	9806-025-003	1
*	Cable-Data, Communication (C3)	9806-015-001	9806-015-003	1
17	Bushing, 7/8	9053-067-002	9053-067-002	1
18	Plug, 7/8	9545-041-006	9545-041-006	1
19	Bracket, Terminal-Mounting	9029-265-001	9029-265-001	1
20	Screw, #10B x 1/2	9545-008-026	9545-008-026	4
21	Label-Warning	8502-639-001	8502-639-001	1
22	Strip-Terminal Marker	9558-025-001	9558-025-001	1
23	Terminal Block	9897-033-002	9897-033-002	1
24	Screw-Phillips, 6ABx3/4	9545-031-010	9545-031-010	2
25	Harness-Power, Terminal Block	9627-747-003	9627-747-002	1
26	Bushing, 1"	9053-067-004	9053-067-004	1
27	Terminal Lug, Solderless	8652-134-001	8652-134-001	1
28	Lock-Washer Extooth #10	8641-582-006	8641-582-006	1
29	Screw, #10-32 TTX 1/2 GRN	9545-008-027	9545-008-027	1

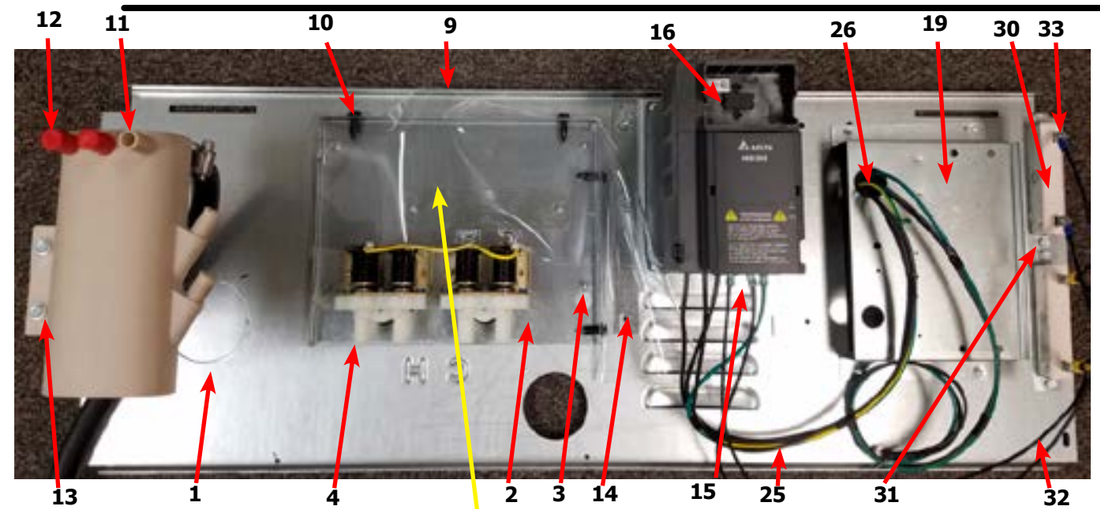

T-1200 Single coil water valve

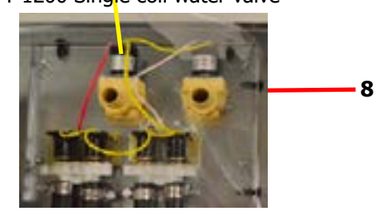

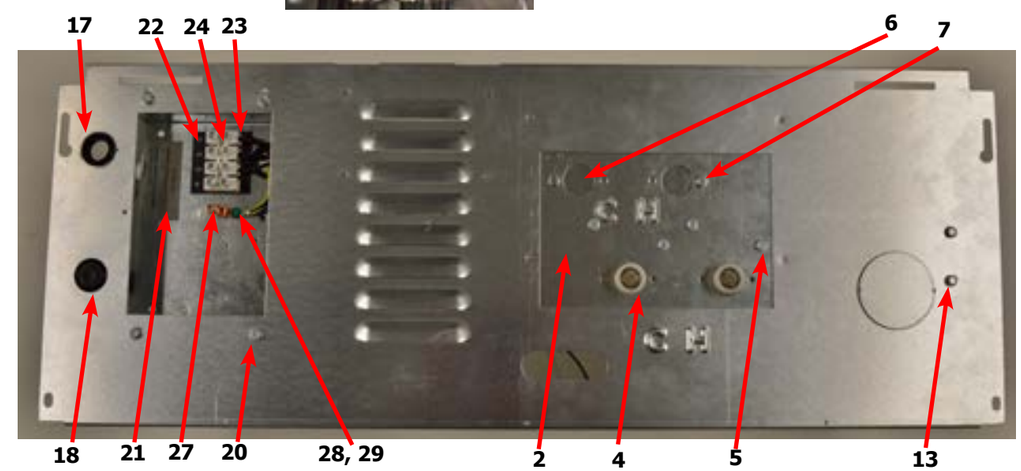

Key	Description	T900	T1200	QTY
30	Braking resistors (160 ohm)	9483-004-003	9483-004-003	2
31	Screw-#10Bx1/2	9545-008-026	9545-008-026	4
32	Wire Assy, Jumper	8220-117-002	8220-117-002	2
33	Screw, #6-32x5/16	9545-044-006	9545-044-006	4
33	Nut, #6-32	8640-411-003	8640-411-003	4
*	Cover Controls	9074-267-001	9074-267-001	1
*	Screw-#10Bx1/2	9545-008-026	9545-008-026	1
*	Label-Warning, Notice	8502-761-001	8502-761-001	1

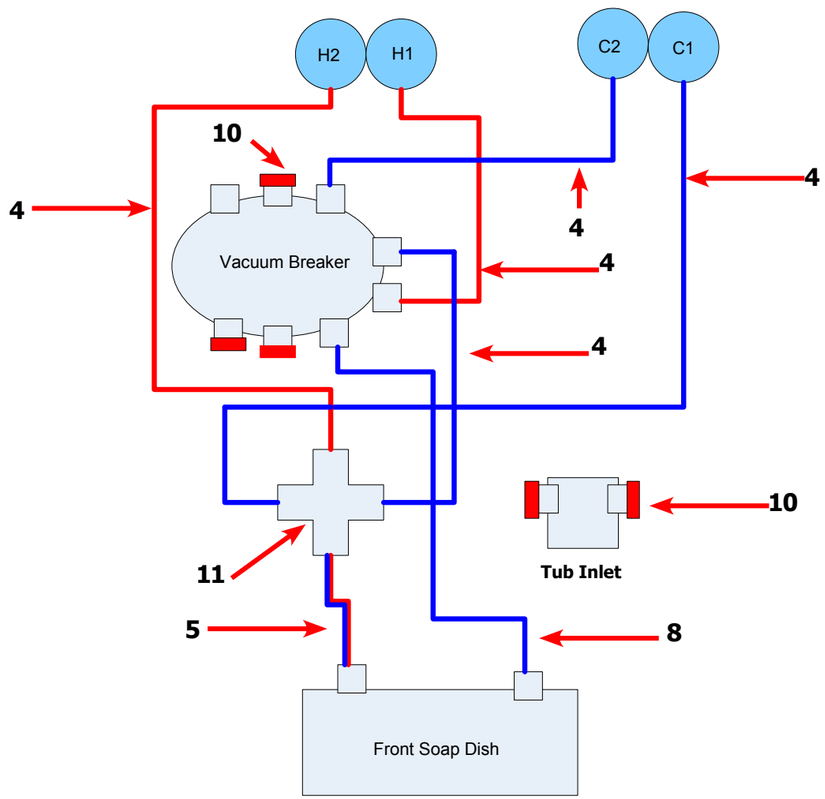

Soap Flush
Setup Front Soap Dish
T900 Coin

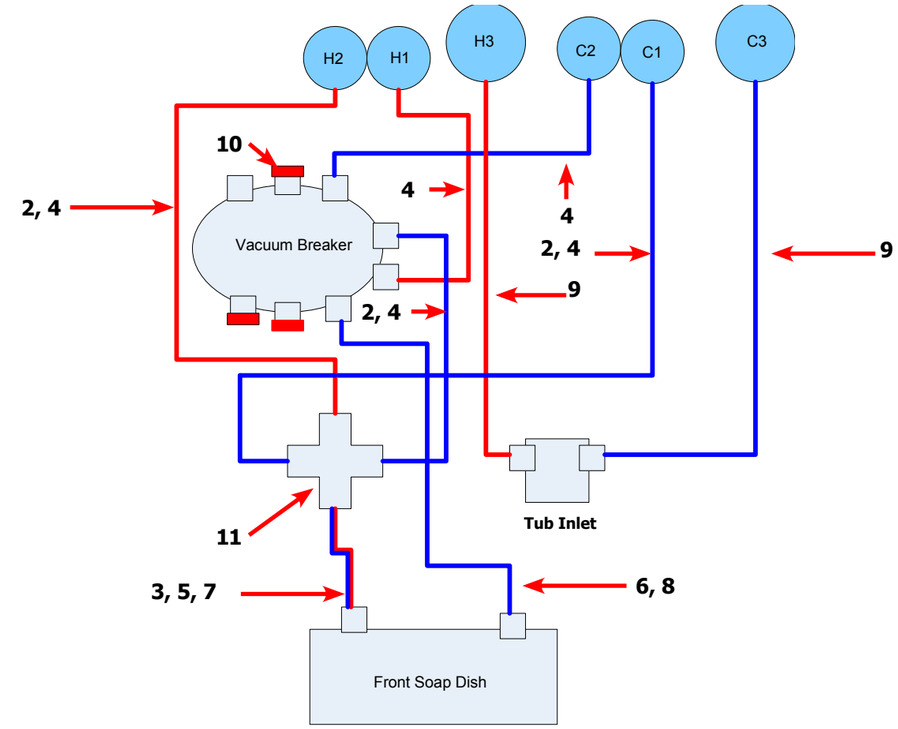

Soap Flush
Setup New Front Soap Dish
T950, T1200, & T1450

Key	Description	T900	T1200
1	9242-453-006 Hose-water,20" 1/2 I.D.		
2	9242-453-009 Hose-water,23" 1/2 I.D		3
3	9242-453-018 Hose-water,29" 1/2 I.D		
4	9242-453-020 Hose-water,18" 1/2 I.D	5	2
5	9242-453-021 Hose-water,31" 1/2 I.D	1	1
6	9242-453-022 Hose-water,43" 1/2 I.D		1
7	9242-453-023 Hose-water,40" 1/2 I.D		
8	9242-453-024 Hose-water,37" 1/2 I.D	1	
9	9242-453-025 Hose-water,19" 7/8 I.D		2
9	9242-466-002 Hose-water,19" 7/8 I.D	2	2
10	0935-135-002 Fill Cap, (Red)	5	3
11	8615-118-001 Fitting-Cross, 1/2"	1	1
*	8654-117-015 Clamp 1" SS	14	14
*	8654-117-017 Clamp 1 1/4" SS		4

Water Inlet Valve Breakdown Part # by Model

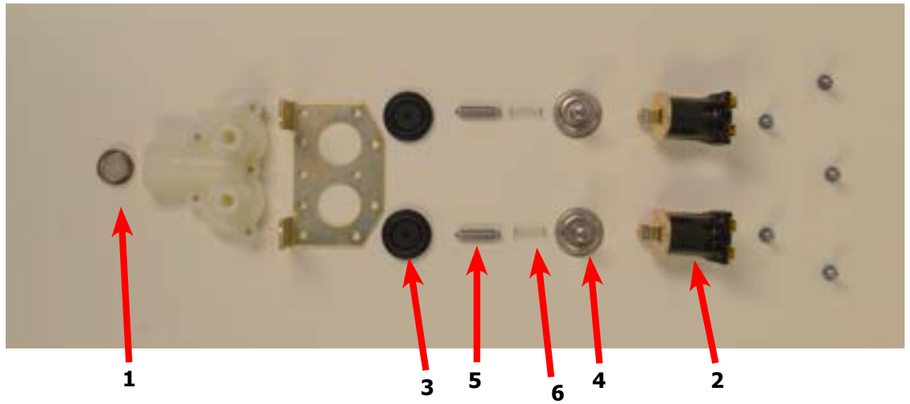

Key	Description	T900	T1200	QTY
*	Valve, Water Inlet (includes 1 thru 6) - **Invensys**	9379-183-012	9379-183-012	2
1	Screen, Inlet end of valve	9555-056-001	9555-056-001	2
2	Coil Assy., 120 V Invensys	9089-017-001	9089-017-001	2
3	Diaphragm Invensys (EPDM)	9118-049-001	9118-049-001	2
3	Diaphragm Invensys (Viton)	9118-049-002	9118-049-002	2
3	Diaphragm Invensys (EPDM NSF)	9118-049-003	9118-049-003	2
4	Guide, Solenoid Invensys	9211-021-002	9211-021-002	2
5	Armature Invensys	9015-008-001	9015-008-001	2
6	Spring, Armature Invensys	9534-298-001	9534-298-001	2
*	Wiring Harness		9794-001-001	1

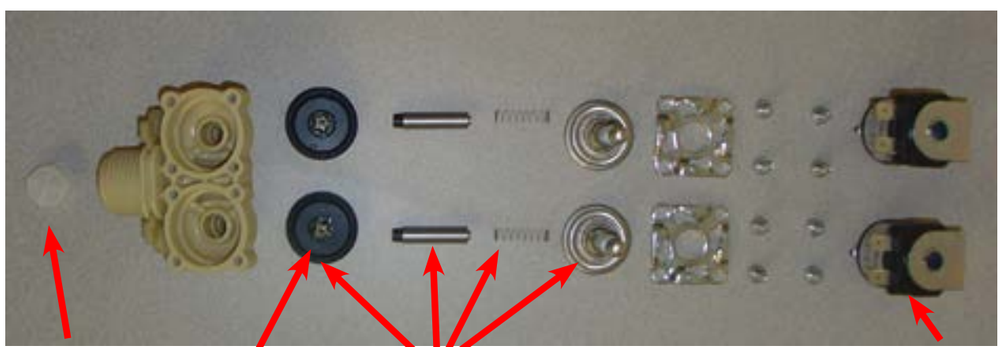

Optional Water Valve

Key	Description	T900	T1200	QTY
*	Dual Coil Water Valve Mueller	9379-192-001	9379-192-001	1
7	Valve Water Body Complete(no coil)	9379-192-002	9379-192-002	1
8	Diaphragm Mueller	9118-054-001	9118-054-001	2
9	Filter Mueller	9183-046-001	9183-046-001	2
10	Coil Mueller	9089-051-001	9089-051-001	2
11	Diaphragm Assembly Mueller Includes	9785-001-001	9785-001-001	2

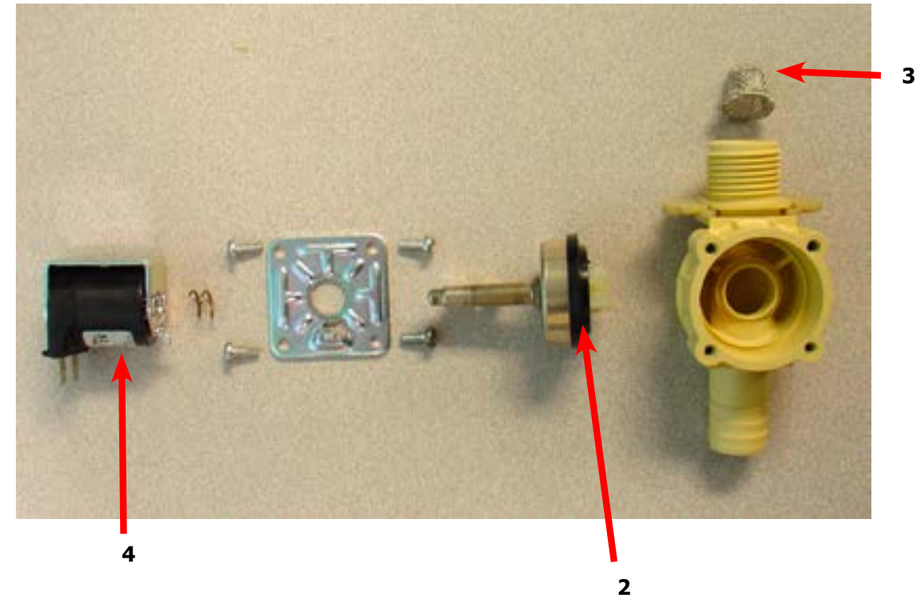

Key	Description	T1200	QTY
*	Single Coil Water Valve Mueller	9379-194-001	1
1	Valve Water Body Complete (no coil)	9379-194-002	1
2	Diaphragm Mueller	9118-055-001	1
3	Filter Mueller	9183-046-001	1
4	Coil Mueller	9089-051-001	1

Chassis and Drain Part # by Model

Key	Description	T-900	T-1200	QTY
1	Base Assy,Frame	9945-128-002	9945-125-002	1
2	Outer Tub Assy	9930-156-001	9930-149-001	1
*	Tub & Cylinder Assy	9869-027-001	9869-022-002	1
3	Tub Front	9974-011-002	9974-011-002	1
*	Gasket, Tub Front	9206-421-002	9206-421-002	1
4	Ring Assy, Tub Mtg-Front Clamp	9950-055-001	9950-055-001	1
5	Bolt, Top Front Ring 3/8"-16 x 3"	9545-029-009	9545-029-009	1
6	Nut C Series 3/8"-16	8640-415-001	8640-415-001	1
7	Bolt, 1/2" -13 x 2" (Tub Mounting to Frame)	9545-017-013	9545-017-013	2
8	Nut, Wizloc 1/2" x 13	8640-417-005	8640-417-005	2
9	Washer, Flat 1/2"	8641-581-026	8641-581-026	2
10	Hose, Tub to Drain Valve	9242-456-001	9242-456-001	1
11	Clamp, Hose (Tub to Drain Valve)	8654-117-014	8654-117-014	2
12	Valve, Drain	9379-202-001	9379-202-001	1
*	Screw, Valve to Base 1/4ABx3/4	9545-030-002	9545-030-002	2
*	Washer, Flat 1/4	8641-581-018	8641-581-018	4
13	Hose, Drain Valve to Tube	9242-457-001	9242-457-001	1
*	Clamp, Hose (Drain Valve to Tube	8654-117-014	8654-117-014	2
14	Tube Assy, Drain	9915-124-002	9915-128-002	1
15	Clamp, Hose (Tube to Frame Bracket)	8654-117-014	8654-117-014	1
*	Bracket, Drain Tube	9029-067-002	9029-067-003	1
*	Screw Tube (Bracket to Base 1/4Bx3/4)	9545-030-002	9545-030-002	4
16	Hose, Overflow Tub To Drain Tube	9942-449-003	9942-449-003	1
*	Clamp, Hose	8654-117-018	8654-117-018	1
*	Tube, Suds overflow	9242-463-004	9242-463-004	1
*	Clamp, Hose	8654-117-008	8654-117-008	2
17	Hose, Pressure switch	9242-175-007	9242-175-004	1
	Clamp, Overflow Hose	8654-117-015	8654-117-015	1

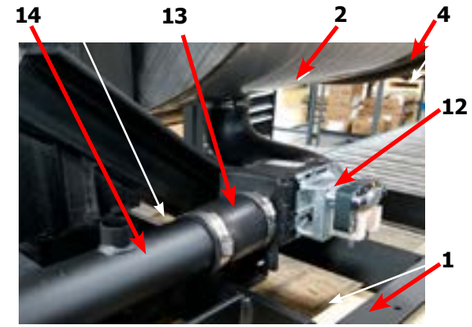

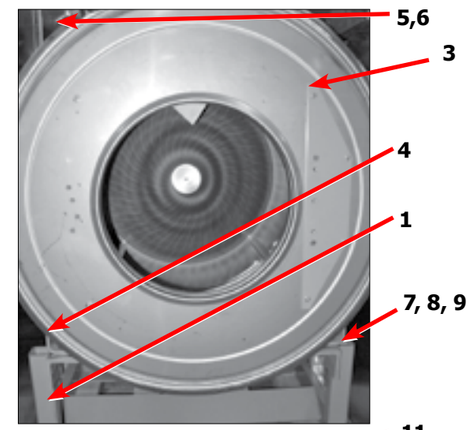

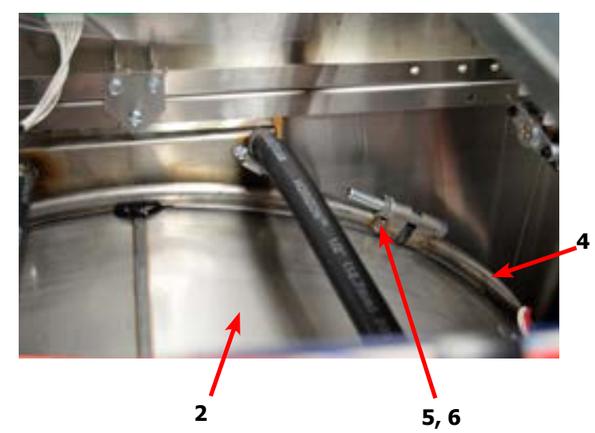

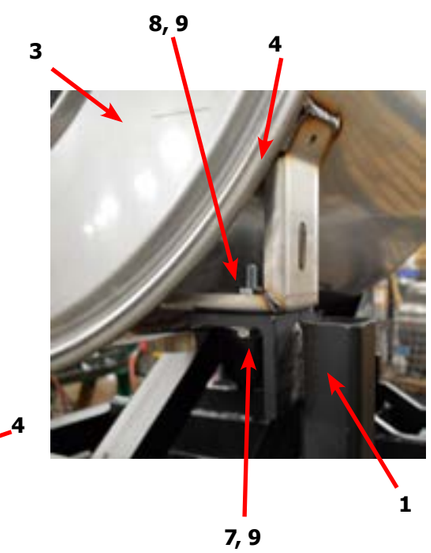

Drain Valve Group Part # by Model

Key	Description	Part Number	Qty
1	Valve, Drain (includes #2 thru #11	9379-202-001	1
2	Body, Valve (w/ball)	9064-072-001	1
3	Motor & Gear Train (complete)	9914-137-023	1
4	Plate, Motor Mtg	9452-538-001	1
5	Screw	8639-994-001	1
6	Spring, Drive	9534-339-001	1
7	Screw	9545-054-001	1
8	Screw	9545-054-002	1
9	Seal, V Packer	9532-134-001	1
10	Washer	8641-584-001	1
11	Pin, Main Drive	9451-196-001	1
*	Plate (spacers needed for replacement motor mtg. plate)	9538-149-001	1
12	Kit - Seal Replacement	9732-327-001	1

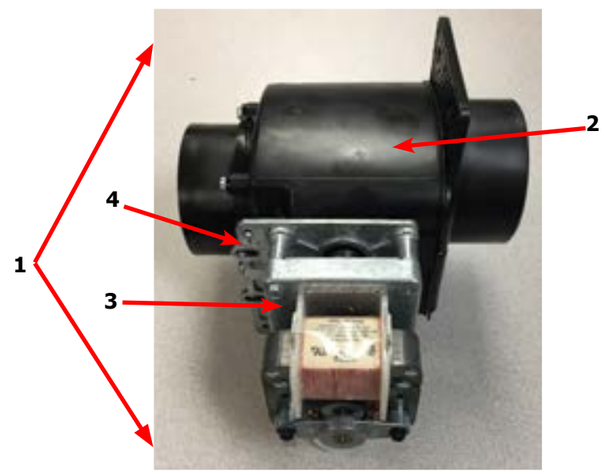

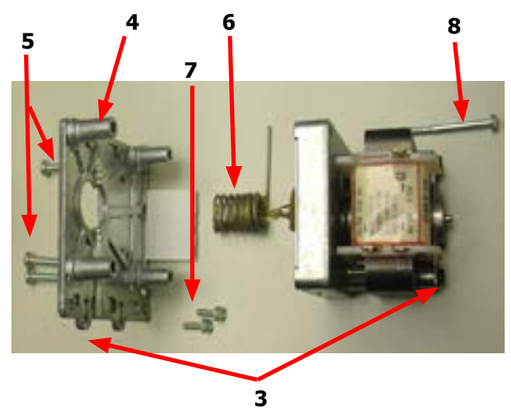

Notes

Key	Description	T900	T1200	QTY
1	Trough Assy,Controls 208-240 volt (all parts below #2-#43 & trough)	9857-261-001	9857-265-001	1
*	Trough only	9839-018-001	9839-018-001	1
*	Screw, Trough Sides	9545-008-026	9545-008-026	4
*	Lockwasher #10	8641-582-006	8641-582-006	4
2	Spreader-Chanel, Trough	9081-136-001	9081-136-001	
*	Screw, Mtg #10Bx1/2"	9545-008-026	9545-008-026	4
3	Transformer, Control (Secondary Voltage to 115 volts)	8711-004-001	8711-004-001	1
*	Screw, Mtg #10Bx1/2"	9545-008-026	9545-008-026	4
*	Lockwasher #10	8641-582-006	8641-582-006	4
4	Screw GRN. #10-32x 1/2"	9545-008-027	9545-008-027	1
5	Lockwasher #10	8641-582-006	8641-582-006	1
6	Lug, Grounding	8652-130-037	8652-130-037	1
7	PCB assembly Relay Main	9473-006-001	9473-006-001	1
*	Support, Edge Holding	9548-285-001	9548-285-001	6
*	Harness, P17 Drain/Therm/Sol	9627-796-002	9627-796-002	1
*	Harness P19/Water Valve	9627-795-004	9627-795-004	1
*	Harness P8/P16	9627-794-001	9627-794-001	1
*	Harness P20/P21	9627-793-001	9627-793-001	1
*	Bushing , Wire 7/8	9053-067-002	9053-067-002	2
*	Standoff Twistlock	9527-002-002	9527-002-002	3
8	Terminal Block Assy, POWER	9897-026-004	9897-026-004	1
*	Screw, Mtg 8ABx1/2"	9545-045-012	9545-045-012	2
*	Kit-Pressure Sensor, Electronic	9732-314-001	9732-314-001	1
9	Kit-Repaacement, Pressure Sensor (only)	9732-315-001	9732-315-001	1
*	Support-PCB, 3/8", Edge Holding	9548-285-001	9548-285-001	4
*	Screw, Mtg #8Bx1/4"	9545-045-001	9545-045-001	2
*	Harness P5/Pressure	9627-908-011	9627-908-013	1
10	Transformer, (Step Down) 120/24VAC 50/60hz	8711-009-006	8711-009-006	1
*	Screw, Transformer Mtg #8Bx1/4"	9545-045-001	9545-045-001	4
*	Lockwasher #6 exttooth	8641-582-005	8641-582-005	4
11	Fuseholder	9200-001-002	9200-001-002	1
*	Fuse 1.5 amp	8636-018-001		1
*	Fuse 2.5 amp		8636-018-004	1
12	Label Fuse 1.5 amp Rear	8502-716-001		1
12	Label Fuse 2.5 amp Rear		8502-716-002	1
13	Angle Support Trough	9003-271-001	9029-318-001	1
*	Screw, Trough Bracket	9545-008-026	9545-008-026	4
14	Chanel-Support, Trough	9081-172-001	9081-172-001	1
*	Screw, Mtg #10Bx1/2"	9545-008-026	9545-008-026	4
15	Chanel	9081-108-001	9081-108-002	1
*	Screw, Mtg #10Bx1/2"	9545-008-026	9545-008-026	2
*	Wire Assy BLK/BLU	8220-001-231	8220-001-231	1
*	Wire Assy RED/BLU	8220-001-230	8220-001-230	1

Electrical Components - Top Compartment

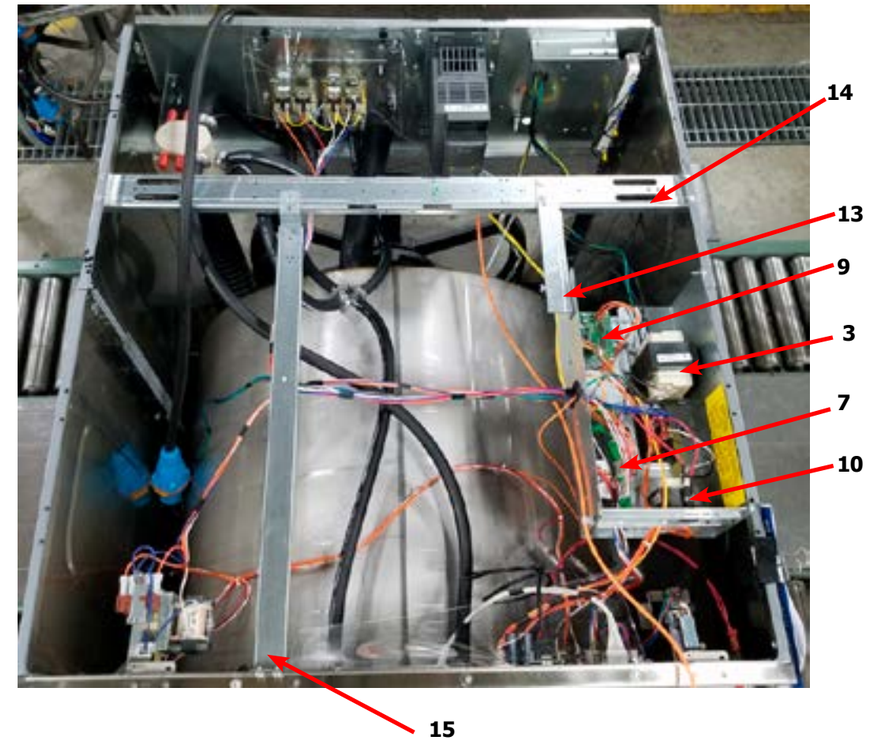

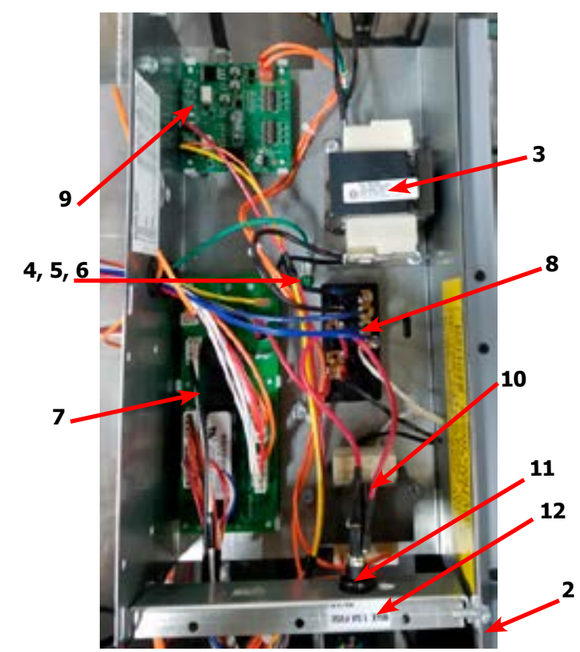

Control Panel Part # by Model

Key	Description	T900	T1200	QTY
1	Panel Control Assembly(panel only)	9989-560-001	9989-560-001	1
*	Screw, to Side Panels 5/16, Hxwshrhdundct #10Bx 1/2"	9545-008-026	9545-008-026	4
2	Plate-Latch, Top	9452-625-001	9452-625-001	2
3	Nut, #8-32	8640-412-005	8640-412-005	4
4	Locator Panel	9355-001-001	9355-001-001	1
5	Screw FillHDCR 10Bx1/2" Guide	9545-008-023	9545-008-023	1
6	Spacer Pushbutton (Micro)	9538-192-001	9538-192-001	1
7	Pushbutton Control (coin)[Blue]	9035-062-001	9035-062-001	1
7	Pushbutton Control (coin)[Black]	9035-062-002	9035-062-002	1
8	Retainer Pushbutton (Micro)	9486-160-001	9486-160-001	1
9	Nut Hexelasticstop #4-40	8640-424-002	8640-424-002	2
10	Spacer Plastic #6x9/16	9538-157-018	9538-157-018	5
11	PCB assembly Control /Display STOP	9473-010-001	9473-010-001	1
12	Nut Elasticstop #6-32	8640-411-002	8640-411-002	4
13	Nut-Hexkeps, #6-32	8640-411-003	8640-411-003	1
14	Harness LEDPCB	9627-797-001	9627-797-001	1
*	Harness Doorlock, Switches	9627-791-005	9627-791-005	1
15	Spacer Plastic #6x9/16	9538-157-018	9538-157-018	2
16	PCB assembly Mode lights	9473-005-001	9473-005-001	1
17	Nut Hexkeps #6-32	8640-411-003	8640-411-003	2
*	Mode Light Backing Window	9635-022-001	9635-022-001	1
18	Accecptor-Coin, Optical	9021-092-002	9021-092-002	1
19	Retainer, Coin Accecptor	9486-149-001	9486-149-001	2
20	Screws, Torx, T-10, 4Bx3/8ss	9545-053-002	9545-053-002	4
21	Switch Assembly Emergency Stop (includes wire harness)	9732-223-001	9732-223-001	1
22	Spacer Plastic #8x5/16 E-Stop	9538-157-020	9538-157-020	2
23	Plate to mount e-stop button	9452-725-001	9452-725-001	1
24	Nuts-Hexkeps, #8-32	8640-412-005	8640-412-005	3
25	Plastic Shield over main PCB	9550-184-001	9550-184-001	1
26	Nuts-Hexkeps, #8-32	8640-412-005	8640-412-005	3
27	Nameplate,Control Panel (Blue)	9412-206-002	9412-214-002	1
27	Nameplate,Control Panel (Black)	9412-206-001	9412-214-001	1
28	Motor Ass'y, Door Locking (see Door Lock Group for parts breakdown)	9892-015-001	9892-015-001	1
29	Nuts-Hexkeps, #8-32	8640-412-005	8640-412-005	4
*	Battery	8612-001-001	8612-001-001	1
30	Cable, USB	9806-022-001	9806-022-001	1
*	USB Retainer	9486-159-001	9486-159-001	*
31	Screw-Torx T10, #4-40x3/8ss	9545-053-002	9545-053-002	2
32	Nut, Spring	8640-442-001	8640-442-001	2

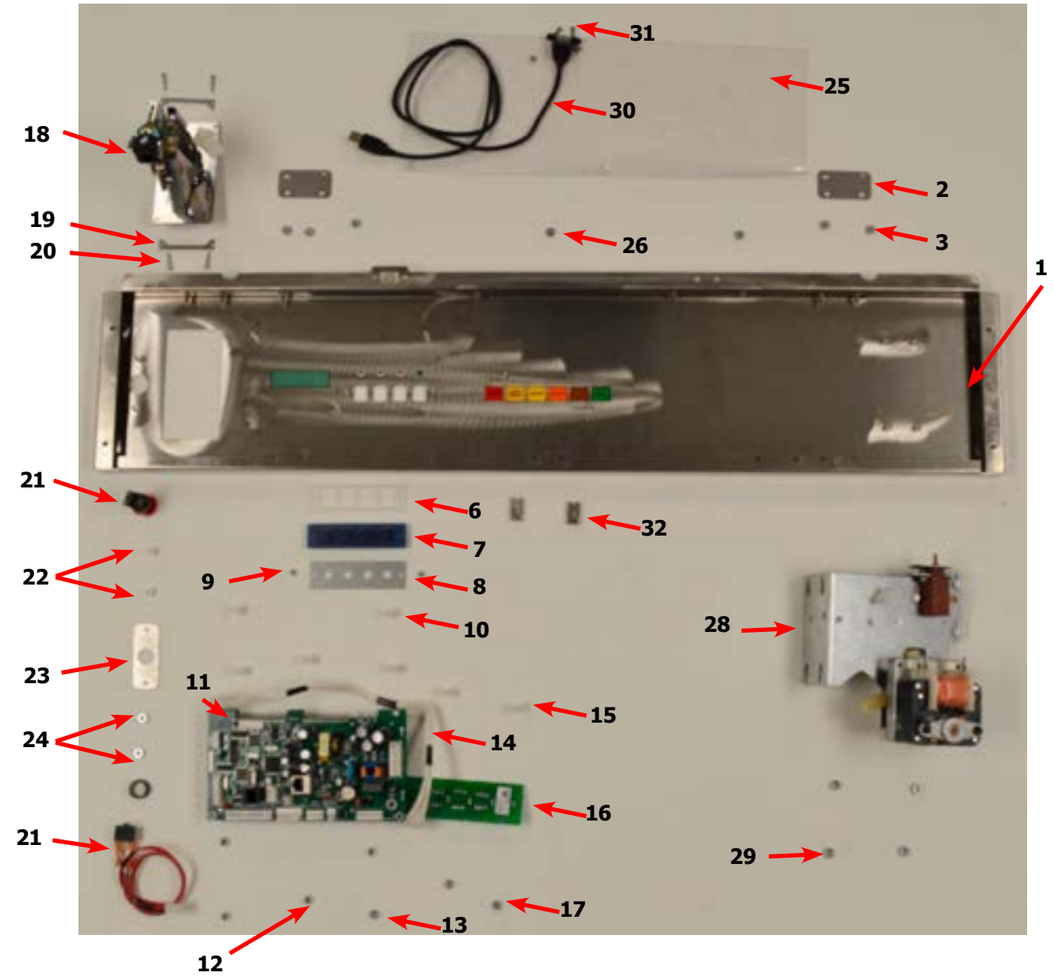

Labels and Diagrams

Key	Description	T-900	T-1200	QTY
*	Wiring Diagram and Schematic, Coin	9506-870-001	9506-871-001	1
*	Transient Voltage Surge Suppressor Infomational	8507-330-001	8507-330-001	1
*	Label High Voltage Warning	8502-614-004	8502-614-004	1
*	Label Fusing & Installation	8502-619-003	8502-619-003	1
*	Label Quality	8511-001-002	8511-001-002	1
1	Label Warning Door Opening (Blue)	8502-757-002	8502-757-002	1
1	Label Warning Door Opening (Black)	8502-757-001	8502-757-001	1
2	Label Warning Risk of Injury (Blue)	8502-759-002	8502-759-002	1
2	Label Warning Risk of Injury (Black)	8502-759-001	8502-759-001	1
3	Label Dispenser (Blue)	8502-756-002	8502-756-002	1
3	Label Dispenser (Black)	8502-756-001	8502-756-001	1
*	Booklet Owners	8514-296-001	8514-296-001	1

1

2

3

Notes

Notes

Section 9:

Coin Handling Parts:

Wiring Diagrams
& Schematics &
maintenance Procedures

Optical Coin Acceptor

Starting after serial# 515483

ey	Description	T900	T1200	QTY
1	Optical Coin Acceptor	9021-092-002	9021-092-002	1
2	Replacement Optical Sensor	9801-099-001	9801-099-001	1
*	Screw, Highth Bar, 3mm	9545-039-002	9545-039-002	2

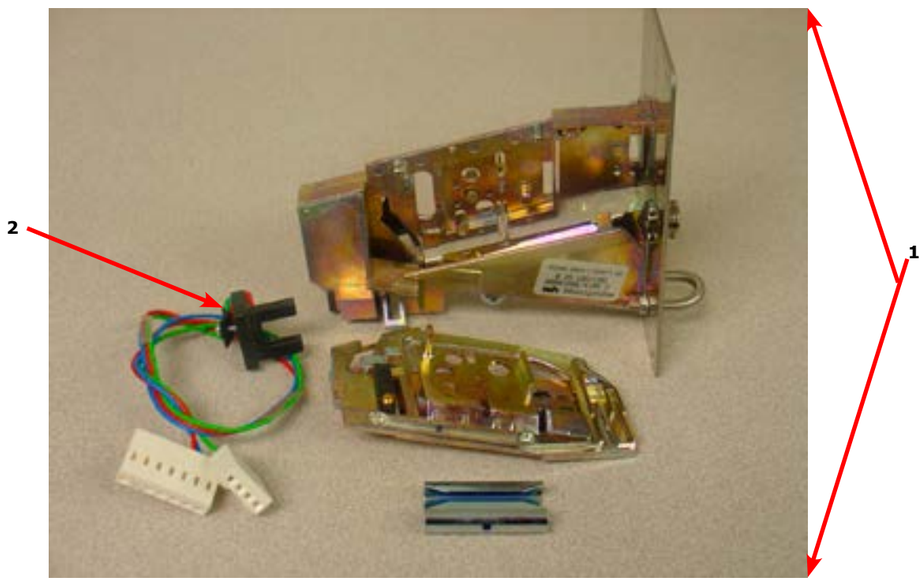

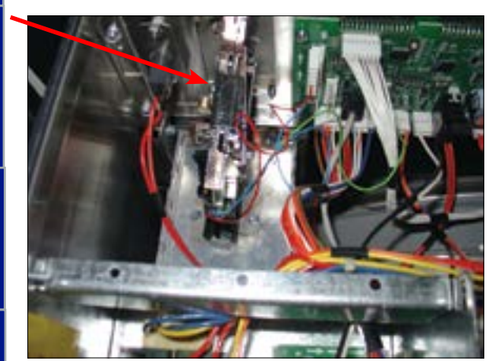

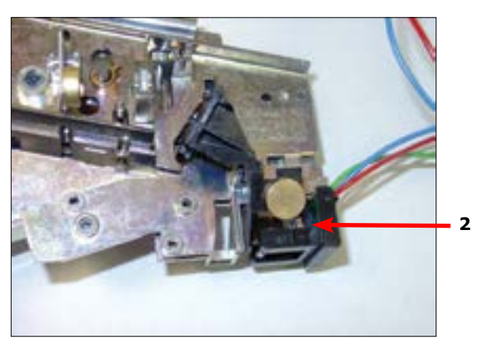

Kit - Electronic Acceptor Conversion for C Series (USA and Canada)

Key	Description	T900	T1200	QTY
	KIT - Electronic Acceptor Conversion for C Series (USA and Canada) Contact the Dexter Factory for Other Countries	9732-301-004	9732-301-004	1
1	Electronic Coin Acceptor (USA and Canada)	9021-077-001	9021-077-001	1
2	Harness for Electronic Coin Acceptor	9627-909-001	9627-909-001	1
3	Transformer 120/18VAC	8711-015-001	8711-015-001	1
*	Wire Assembly - Blue	8220-001-338	8220-001-338	1
*	Wire Assembly - Orange/White	8220-001-235	8220-001-235	1
4	Coin Chute for Electronic Drop	9119-028-001	9119-028-001	1
*	Nut - Hex Elastic Stop	8640-424-002	8640-424-002	1
*	Screw, Torx	9545-020-004	9545-020-004	4
*	Screw, Hex	9545-045-001	9545-045-001	4
*	Label, Informative	6102-017-001	6102-017-001	2
*	Label, Warning	8502-730-001	8502-730-001	1
*	Instructions, Installation	8507-456-004	8507-456-004	1
5	Coin Chute for Electronic Drop	9119-030-001	9119-030-001	1

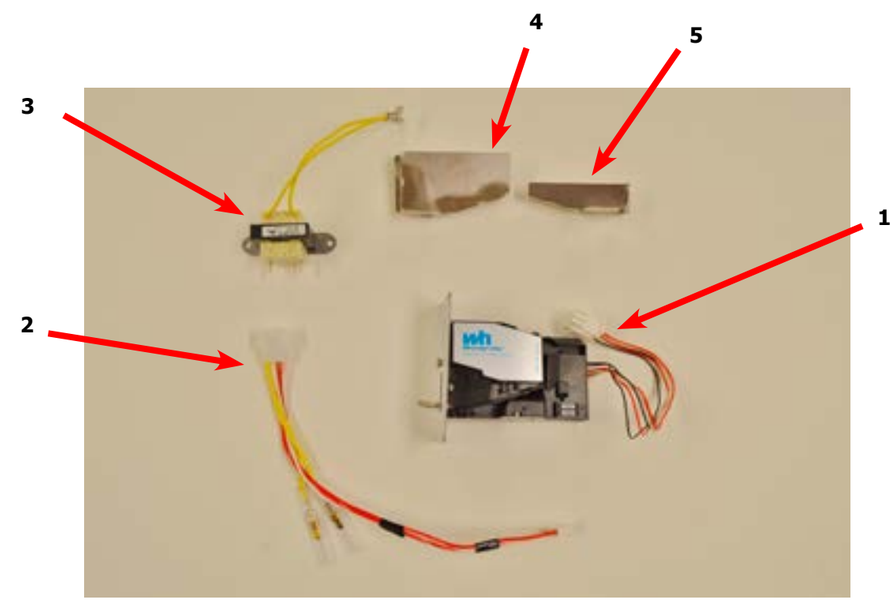

Electronic Acceptor Coin Drop

Setting the electronic coin acceptor switches

Some washer models come equipped with an electronic coin acceptor. Follow the instructions below for setting the switches for the desired country and currencies.

1. The electronic coin acceptor has switch settings depending on the coins and country. See the table below for available values of the left and right coin inputs for the available countries.

   WARNING: turn power off before and leave power off when changing the switches of the electronic coin acceptor.

2. Turn power back on and test coins to ensure proper operation.

Coin Acceptor Switch Settings

■ INDICATES SWITCH POSITION

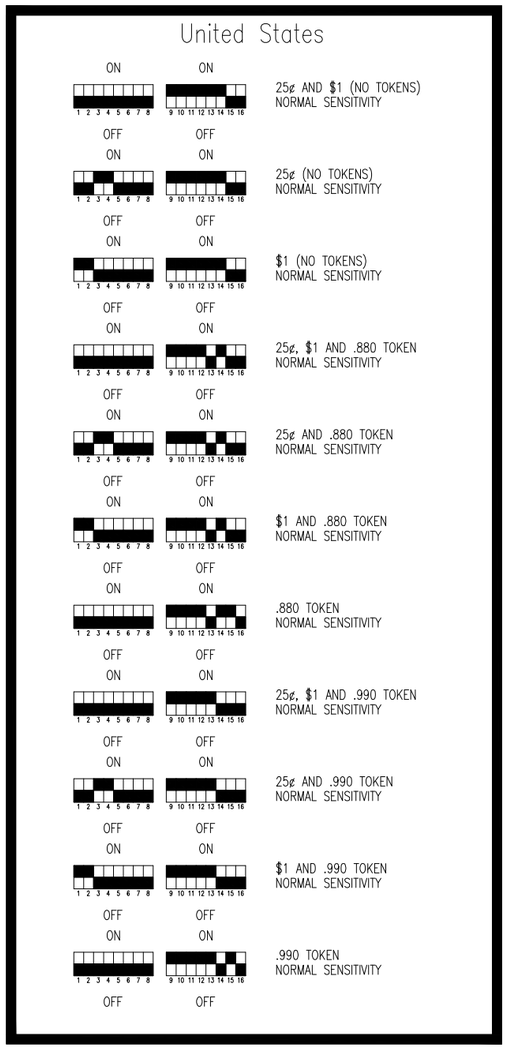

25¢ – one pulse on left washer/dryer input
$1 – one pulse on right washer/dryer input
.880 TOKEN – one pulse on left washer/dryer input
.990 TOKEN – one pulse on right washer/dryer input

Coin Acceptor Switch Settings

■ INDICATES SWITCH POSITION

Canada

ON	ON	25¢, $1(OLD & NEW), $2(OLD & NEW) (NO TOKENS) NORMAL SENSITIVITY
OFF	OFF	
ON	ON	$1(OLD & NEW) AND $2(OLD & NEW) (NO TOKENS) NORMAL SENSITIVITY
OFF	OFF	
ON	ON	25¢ AND $2(OLD & NEW) (NO TOKENS) NORMAL SENSITIVITY
OFF	OFF	
ON	ON	25¢ AND $1(OLD & NEW) (NO TOKENS) NORMAL SENSITIVITY
OFF	OFF	
ON	ON	25¢ (NO TOKENS) NORMAL SENSITIVITY
OFF	OFF	
ON	ON	$2(OLD & NEW) (NO TOKENS) NORMAL SENSITIVITY
OFF	OFF	
ON	ON	$1(OLD & NEW) (NO TOKENS) NORMAL SENSITIVITY
OFF	OFF	
ON	ON	25¢, $1(NEW ONLY), $2(NEW ONLY) (NO TOKENS) NORMAL SENSITIVITY
OFF	OFF	
ON	ON	$1(NEW ONLY) AND $2(NEW ONLY) (NO TOKENS) NORMAL SENSITIVITY
OFF	OFF	
ON	ON	25¢ AND $2(NEW ONLY) (NO TOKENS) NORMAL SENSITIVITY
OFF	OFF	
ON	ON	25¢ AND $1(NEW ONLY) (NO TOKENS) NORMAL SENSITIVITY
OFF	OFF	
ON	ON	$2(NEW ONLY) (NO TOKENS) NORMAL SENSITIVITY
OFF	OFF	
ON	ON	$1(NEW ONLY) (NO TOKENS) NORMAL SENSITIVITY
OFF	OFF	

Canada

ON	ON	25¢, $1(OLD & NEW), $2(OLD & NEW) AND .880 TOKEN NORMAL SENSITIVITY
OFF	OFF	
ON	ON	$1(OLD & NEW), $2(OLD & NEW) AND .880 TOKEN NORMAL SENSITIVITY
OFF	OFF	
ON	ON	25¢, $2(OLD & NEW) AND .880 TOKEN NORMAL SENSITIVITY
OFF	OFF	
ON	ON	25¢, $1(OLD & NEW) AND .880 TOKEN NORMAL SENSITIVITY
OFF	OFF	
ON	ON	25¢ AND .880 TOKEN NORMAL SENSITIVITY
OFF	OFF	
ON	ON	$2(OLD & NEW) AND .880 TOKEN NORMAL SENSITIVITY
OFF	OFF	
ON	ON	$1(OLD & NEW) AND .880 TOKEN NORMAL SENSITIVITY
OFF	OFF	
ON	ON	25¢, $1(NEW ONLY), $2(NEW ONLY) AND .880 TOKEN NORMAL SENSITIVITY
OFF	OFF	
ON	ON	$1(NEW ONLY), $2(NEW ONLY) AND .880 TOKEN NORMAL SENSITIVITY
OFF	OFF	
ON	ON	25¢, $2(NEW ONLY) AND .880 TOKEN NORMAL SENSITIVITY
OFF	OFF	
ON	ON	25¢, $1(NEW ONLY) AND .880 TOKEN NORMAL SENSITIVITY
OFF	OFF	
ON	ON	$2(NEW ONLY) AND .880 TOKEN NORMAL SENSITIVITY
OFF	OFF	
ON	ON	$1(NEW ONLY) AND .880 TOKEN NORMAL SENSITIVITY
OFF	OFF	

25¢ – one pulse on left washer/dryer input
$1 – one pulse on right washer/dryer input
$2 – two pulses on right washer/dryer input
.880 TOKEN – one pulse on right washer/dryer input
.990 TOKEN – one pulse on right washer/dryer input

Coin Acceptor Switch Settings

■ INDICATES SWITCH POSITION

Canada

ON	ON	25¢, $1(OLD & NEW), $2(OLD & NEW) AND .990 TOKEN NORMAL SENSITIVITY
OFF	OFF	
ON	ON	$1(OLD & NEW), $2(OLD & NEW) AND .990 TOKEN NORMAL SENSITIVITY
OFF	OFF	
ON	ON	25¢, $2(OLD & NEW) AND .990 TOKEN NORMAL SENSITIVITY
OFF	OFF	
ON	ON	25¢, $1(OLD & NEW) AND .990 TOKEN NORMAL SENSITIVITY
OFF	OFF	
ON	ON	25¢ AND .990 TOKEN NORMAL SENSITIVITY
OFF	OFF	
ON	ON	$2(OLD & NEW) AND .990 TOKEN NORMAL SENSITIVITY
OFF	OFF	
ON	ON	$1(OLD & NEW) AND .990 TOKEN NORMAL SENSITIVITY
OFF	OFF	
ON	ON	25¢, $1(NEW ONLY), $2(NEW ONLY) AND .990 TOKEN NORMAL SENSITIVITY
OFF	OFF	
ON	ON	$1(NEW ONLY), $2(NEW ONLY) AND .990 TOKEN NORMAL SENSITIVITY
OFF	OFF	
ON	ON	25¢, $2(NEW ONLY) AND .990 TOKEN NORMAL SENSITIVITY
OFF	OFF	
ON	ON	25¢, $1(NEW ONLY) AND .990 TOKEN NORMAL SENSITIVITY
OFF	OFF	
ON	ON	$2(NEW ONLY) AND .990 TOKEN NORMAL SENSITIVITY
OFF	OFF	
ON	ON	$1(NEW ONLY) AND .990 TOKEN NORMAL SENSITIVITY
OFF	OFF	

Canada

ON	ON	25¢, $1(OLD & NEW), $2(OLD & NEW), .880 and .990 TOKEN NORMAL SENSITIVITY
OFF	OFF	
ON	ON	$1(OLD & NEW), $2(OLD & NEW), .880 AND .990 TOKEN NORMAL SENSITIVITY
OFF	OFF	
ON	ON	25¢, $2(OLD & NEW), .880 AND .990 TOKEN NORMAL SENSITIVITY
OFF	OFF	
ON	ON	25¢, $1(OLD & NEW), .880 AND .990 TOKEN NORMAL SENSITIVITY
OFF	OFF	
ON	ON	25¢, .880 AND .990 TOKEN NORMAL SENSITIVITY
OFF	OFF	
ON	ON	$2(OLD & NEW), .880 AND .990 TOKEN NORMAL SENSITIVITY
OFF	OFF	
ON	ON	$1(OLD & NEW), .880 AND .990 TOKEN NORMAL SENSITIVITY
OFF	OFF	
ON	ON	25¢, $1(NEW ONLY), $2(NEW ONLY), .880 AND .990 TOKEN NORMAL SENSITIVITY
OFF	OFF	
ON	ON	$1(NEW ONLY), $2(NEW ONLY), .880 AND .990 TOKEN NORMAL SENSITIVITY
OFF	OFF	
ON	ON	25¢, $2(NEW ONLY), .880 AND .990 TOKEN NORMAL SENSITIVITY
OFF	OFF	
ON	ON	25¢, $1(NEW ONLY), .880 AND .990 TOKEN NORMAL SENSITIVITY
OFF	OFF	
ON	ON	$2(NEW ONLY), .880 AND .990 TOKEN NORMAL SENSITIVITY
OFF	OFF	
ON	ON	$1(NEW ONLY), .880 AND .990 TOKEN NORMAL SENSITIVITY
OFF	OFF	

25¢ – one pulse on left washer/dryer input
$1 – one pulse on right washer/dryer input
$2 – two pulses on right washer/dryer input
.880 TOKEN – one pulse on right washer/dryer input
.990 TOKEN – one pulse on right washer/dryer input

Maintenance Instructions

Electronic Acceptor

Cleaning the electronic coin selector

The EMP 500 v5 is an extraordinarily robust coin selector and operates relatively maintenance free. However, it should be cleaned at regular intervals (minimum once a year) especially if it is operating in an environment with high levels of dust, smoke or nicotine. The cleaning intervals are of course dependent on the level of air borne contaminants.

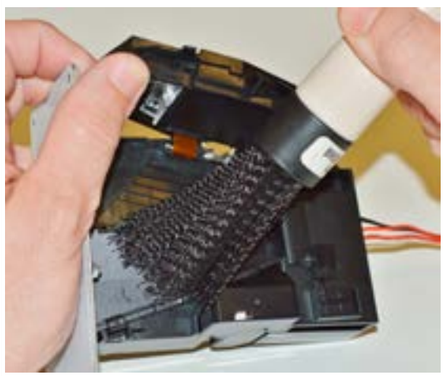

Clean the coin path with soft brush and wipe the exposed surfaces. Use an alcohol moistened cloth. If you find solid residues stuck to the coin rail remove it with an alcohol moistened cloth.

Optical sensors may be cleaned with a soft brush very carefully with an air spray duster.

Location of the optical sensor within coin outlet.

Notes

Notes

Section 10:

Parts 50Hz

Models:

Parts in this section used only in these models. All other parts are same as standard 60 Hz pages.
Wiring Diagrams & Schematics

Transformer, Electrical -39 models
CE -59 Models

WC0900-XA39ECX	230 volts	50hz.	Single Phase
WC01200-XA39ECX	230 volts	50hz	Single Phase
WC0900XA-59CC4X	230 volts	50 hz.	Single Phase

Key	Component	T900	T1200	QTY
1	Circuit Breaker	5198-211-002	5198-211-002	1
*	Instructions, Transformer Connect	8507-449-002	8507-449-002	1
*	Instructions, Transformer Connect (CE -59)	8507-449-004		1
2	Controls Transformer, 200/250-24V 50Hz.	8711-004-004	8711-004-004	1
3	Water Valve	9379-183-013	9379-183-013	2
*	Diaphragm Invensys (EPDM)	9118-049-001	9118-049-001	2
*	Diaphragm Invensys (Viton)	9118-049-002	9118-049-002	2
4	Water Valve Single		9379-194-003	2
*	Diaphragm Mueller		9118-055-001	1
*	Wiring Label , Schematic & Diagram	9506-885-001	9506-886-001	1
*	Wiring Harness, Power Terminal Block	9627-747-006	9627-747-002	1
*	Wiring Harness Main, 1.5	9627-914-001	9627-914-001	1
*	EMI Filter (CE -59)	9183-053-001		1
*	Reactor (CE -59)	9477-007-001		1
5	Ferrite (CE -59)	9183-055-001		1
6	Torroid (CE -59)	9183-056-001		1

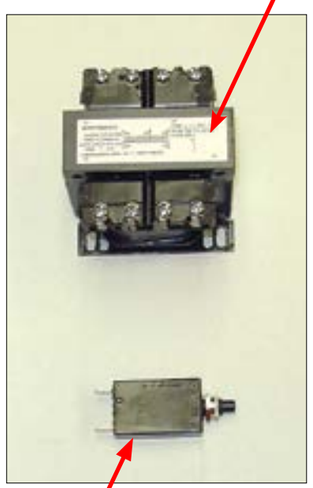

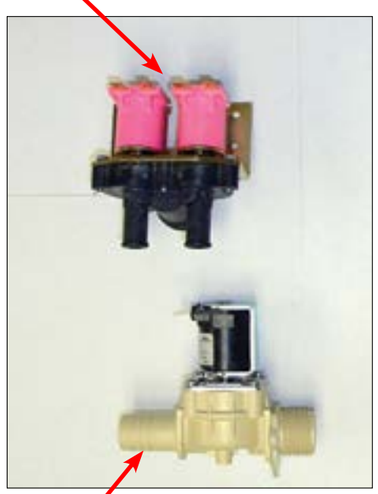

Drain Valve Group 50 HZ

Key	Description	Part Number	Qty
1	Valve, Drain (includes #2 thru #11	9379-202-002	1
2	Body, Valve (w/ball)	9064-072-001	1
3	Motor & Gear Train (complete)	9914-137-022	1
4	Plate, Motor Mtg	9452-538-001	1
5	Screw	8639-994-001	1
6	Spring, Drive	9534-339-001	1
7	Screw	9545-054-001	1
8	Screw	9545-054-002	1
9	Seal, V Packer	9532-134-001	1
10	Washer	8641-584-001	1
11	Pin, Main Drive	9451-196-001	1
*	Plate (spacers needed for replacement motor mtg. plate)	9538-149-001	1
12	Kit - Seal Replacement	9732-327-001	1

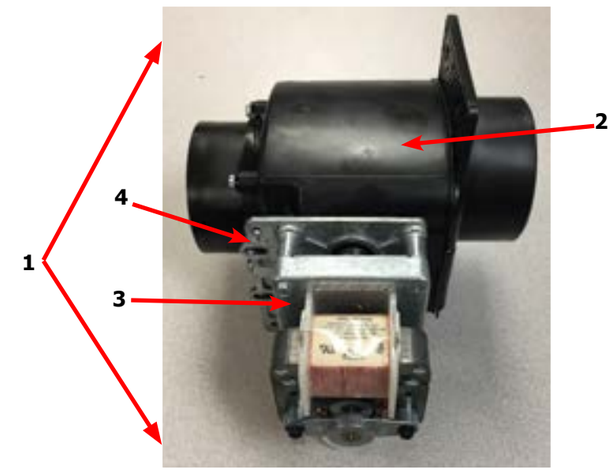

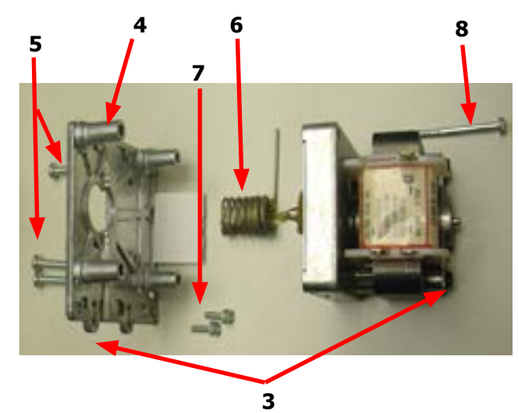

Door Lock Motor Assy # by Model 50Hz.

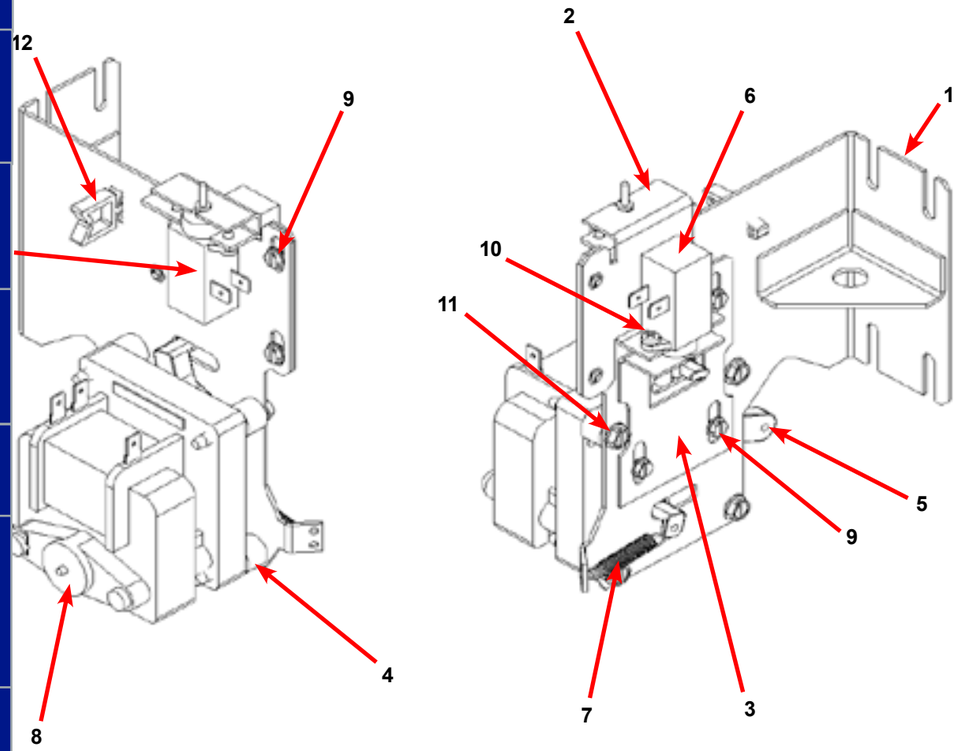

Description	T900	T1200	QTY
Actuator Assembly (Includes 1-10, Rod NOT included)	9892-015-002	9892-015-002	1
Bracket Assy, Slide Lock Actuator	9985-190-001	9985-190-001	1
Bracket Assy, Slide - Unlock	9985-189-001	9985-189-001	1
Bracket Slide Lock	9029-204-001	9029-204-001	1
Spacer, Plastic	9538-157-021	9538-157-021	4
Arm - Door Lock	9001-063-001	9001-063-001	1
Thermoactuator - Door Lock Relay 24V	9586-001-003	9586-001-003	2
Spring - Extension	9534-350-001	9534-350-001	1
Motor & Gear Assembly 24V	9914-137-014	9914-137-014	1
Screw -Hxwshrhdslsems, 6-32 x 3/16	9545-044-003	9545-044-003	6
Cross Recessed PAn Hd Tapping screw	9545-031-011	9545-031-011	4
Screw Pnhdcr, 10-32 UNFx0 .75	9545-012-029	9545-012-029	4
Standoff-Wire Saddle	9527-007-001	9527-007-001	1
Rod, Door Lock	9497-225-015	9497-225-015	1
Harness, Door Lock/Drain, P17	9627-796-001	9627-796-001	1

CE Labels and Diagrams (-59)

Key	Description	T900	QTY
*	Do Not Enter/Confined Space Warning Label	8502-748-001	1
*	Do Not Operate w/ Gear Label	8502-748-003	2
*	Do Not Operate w/out Gear Label	8502-748-004	2
*	Elec. Shock Warning Label	8502-748-005	2
*	Explosive Material Warning Label	8502-748-006	1
*	Flammable Material Warning Label	8502-748-007	1
*	Lockout Warning Label	8502-748-008	1
*	Read Manual Warning Label	8502-748-009	2
*	Emergency Stop Label	8502-765-001	
*	Wiring Schematic/Diagram Label	9506-938-001	1
*	Operators Manual	8514-300-001	1

T-900 -59 Model Voltage Schematic

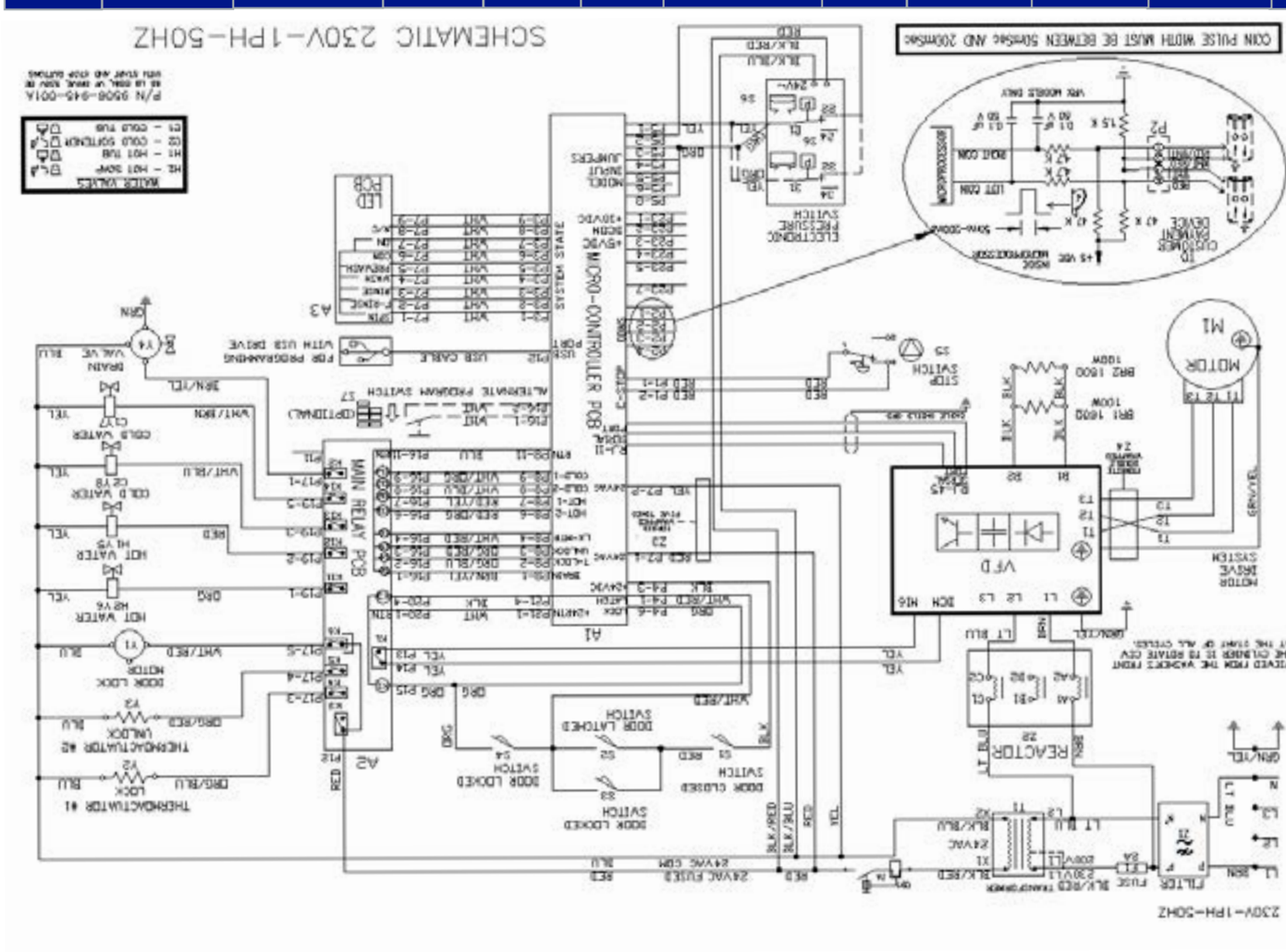

T-900 -59 Model Voltage Diagram

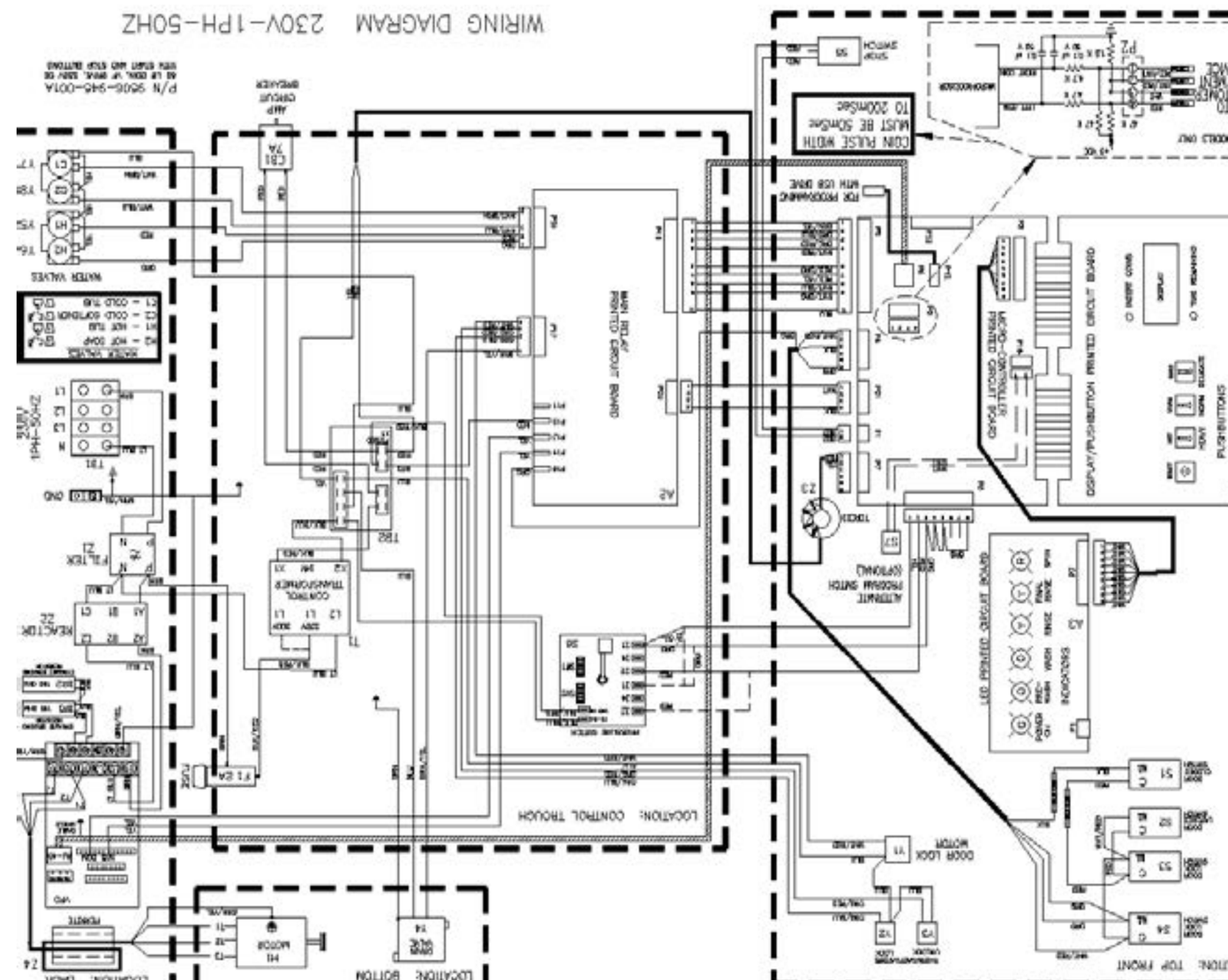

T-900 230/50/1 Voltage Schematic

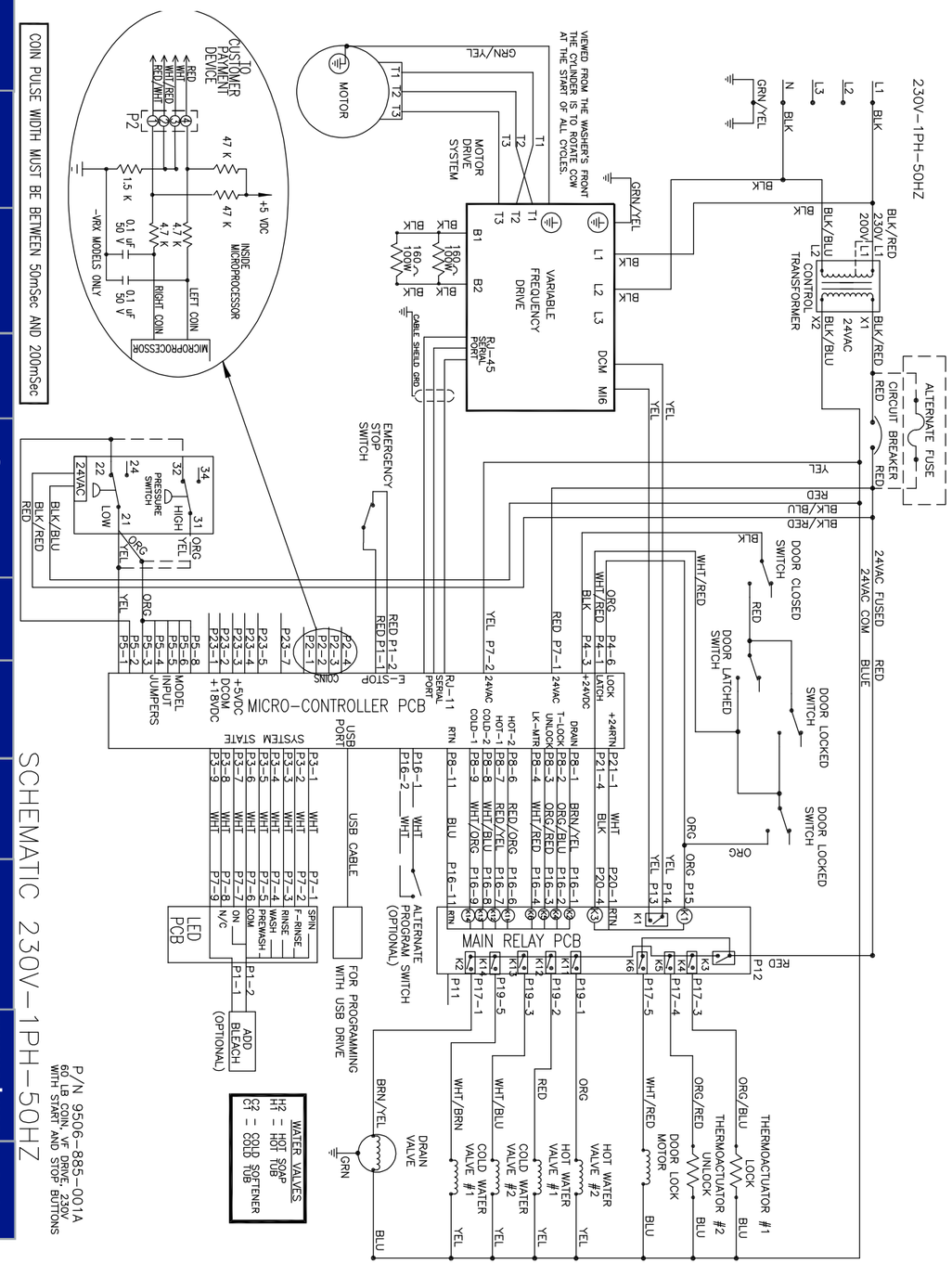

T-900 230/50/1 Voltage Diagram

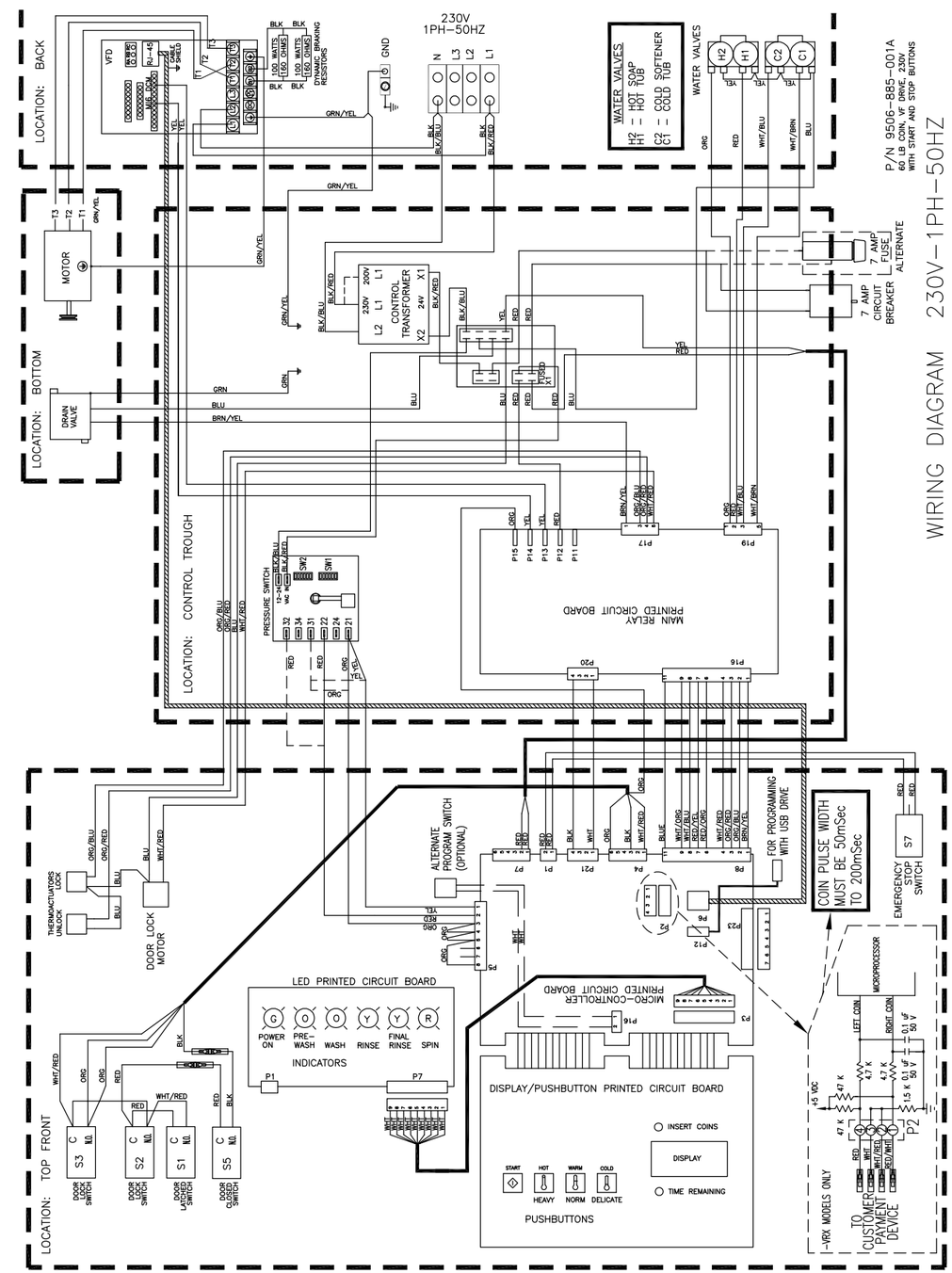

T-1200 230/50/1 Voltage Schematic

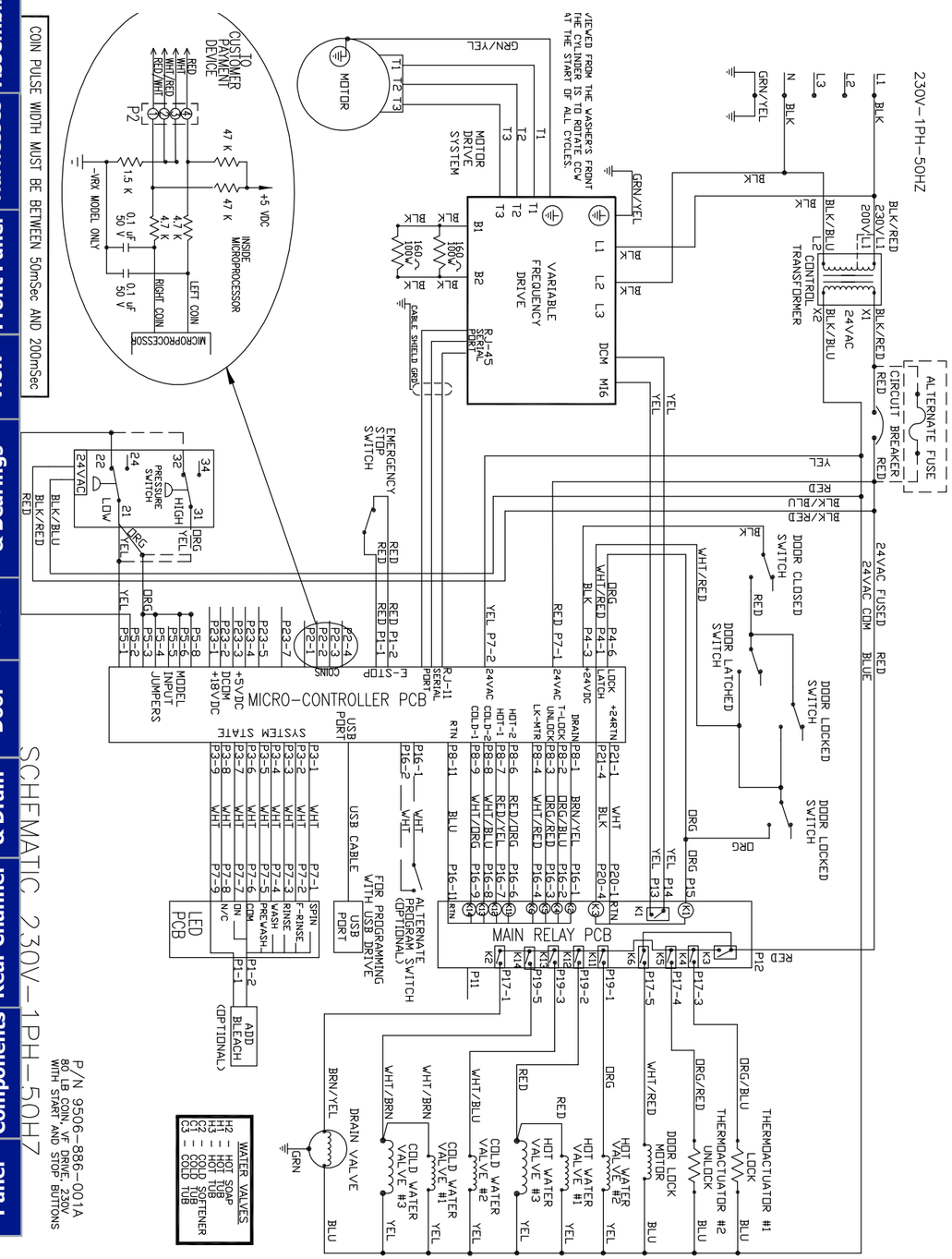
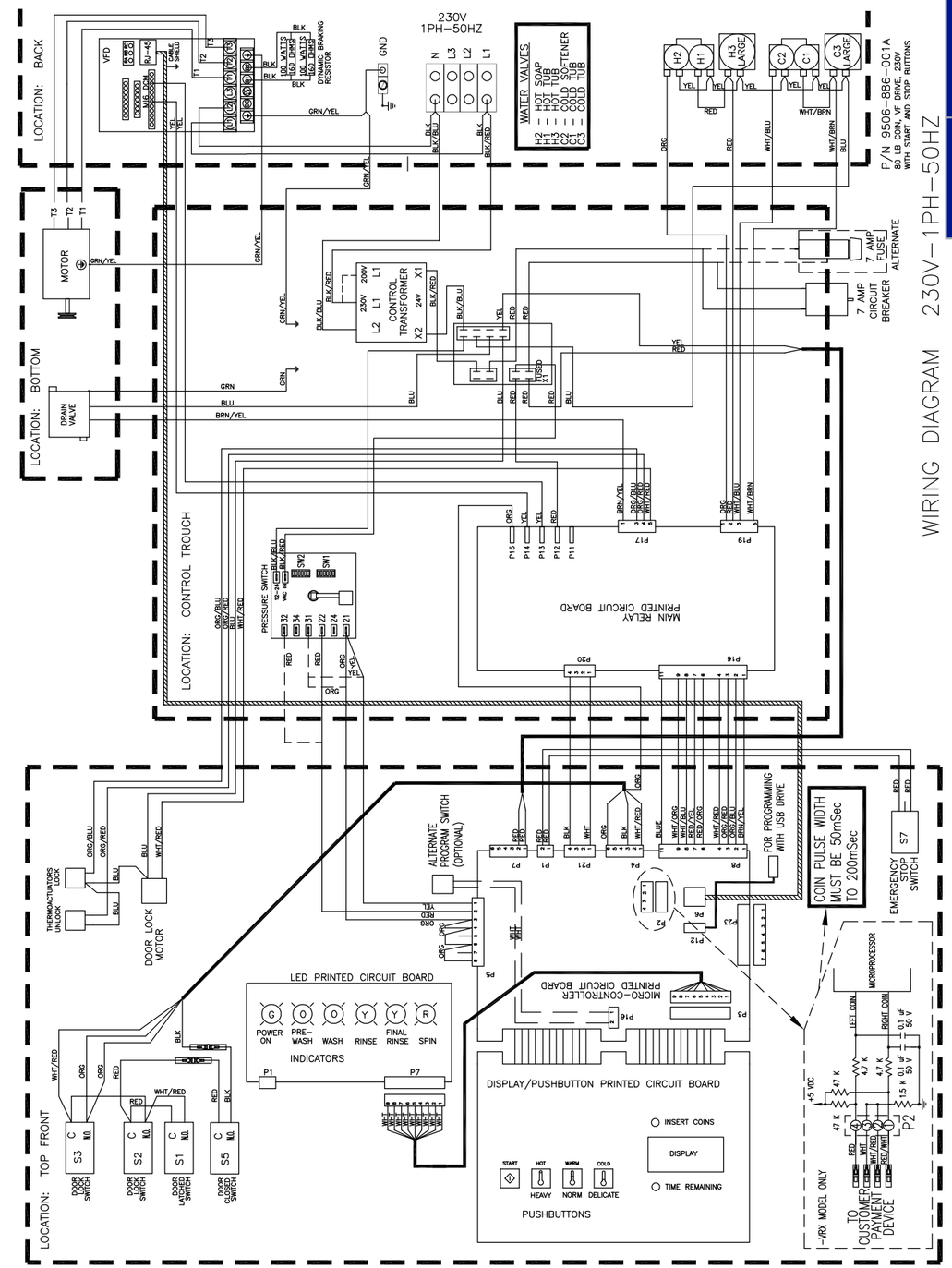
T-1200 230/50/1 Voltage Diagram