DEXTER®
LAUNDRY

USE THE BLUE TABS LOCATED ON THE RIGHT AND LEFT SIDES OF THE FOLLOWING DOCUMENT TO ADVANCE TO EACH SECTION.

C-Series Accessories

WC0300XA-10EC4X 120 volts 60hz. Single Phase
After Serial #W1.19213.001

WC0300XA-12EC4X 208-240 volts 60hz. Single Phase or Three Phase
After Serial # W1.19211.025

WC0400XA-12EC4X 208-240 volts 60hz Single Phase or Three Phase
After Serial #W1.19219.027

WC0600XA-12EC4X 208-240 volts 60hz Single Phase or Three Phase
After Serial #W1.19220.051

Key	Description	T300	T400	T600	QTY
*	Kit, Door Gasket Expander (large)	9732-139-002	9732-139-002	9732-139-002	
*	Kit, Door Gasket Expander (small)	9732-139-001	9732-139-001	9732-139-001	
*	Hose, Water Supply 3/8" I.D. x 48"	9990-027-011	9990-027-011	9990-027-011	2
*	Washer, Inlet Hose (furnished)	8641-242-000	8641-242-000	8641-242-000	2
*	Strainer, Inlet Hose (furnished)	9565-003-001	9565-003-001	9565-003-001	2
*	Bevel Washer for 5/8" bolt used in installations using angle iron bases	8641-586-002	8641-586-002	8641-586-002	
*	Bevel Washer for 3/4" bolt used in installations using angle iron bases	8641-586-003	8641-586-003	8641-586-003	
*	Sealing compound	8538-151-001	8538-151-001	8538-151-001	
*	TORX#20	8545-051-002	8545-051-002	8545-051-002	
*	Flow Restrictors (in dispenser)	9475-002-002	9475-002-002	9475-002-002	2
*	Battery (used on Control PCB)	8612-001-001	8612-001-001	8612-001-001	
*	Coin Bearing & Seal Kit	9732-219-001	9732-219-002	9732-219-004	
*	Coin Op CD with OS2 Platform for A Series Washers Only	9504-015-001	9504-015-001	9504-015-001	
*	Coin Box Assy, Blue Large	9807-099-002	9807-099-002	9807-099-002	1
	Coin Box Assy, Black Large	9807-099-004	9807-099-004	9807-099-004	1
	USB, Thumb Drive (Blank)	9150-045-001	9150-045-001	9150-045-001	1
	USB, Thumb Drive, W/File	9150-045-002	9150-045-002	9150-045-002	1
*	Mode Light Backing Window	9635-022-001	9635-022-001	9635-022-001	1

Kits, Assemblies, & Common Parts

Coin Acceptor Components	Part Number
Optical Coin Acceptor	9021-092-002
Optical Coin Switch Replacement	9801-099-001
Coin Drop Screws	9545-053-002
Retainer, Coin Acceptor	9486-149-001
Loading Door & Door Lock Components	**Part Number**
Door Glass Gasket (Standard Door)	9206-419-001
Door Glass Gasket (Small Door)	9206-411-002
Door Handle Only (Large)	9244-091-001
Door Close Switch	9539-492-001
Door Lock Gear Motor Assembly	9892-015-001
Kit - Door Latching Assy. & Cam (replaces original Door Latching Assembly)	9732-347-001
Kit - Door Cam Replacement	9732-346-002
Kit - Locking Pawl Replacement	9732-346-001
Kit - Door Gasket Expander Kit (Small)	9732-139-001
Kit - Door Gasket Expander Kit (Large)	9732-139-002
Electrical Components	**Part Number**
Transformer, Main	8711-004-001
Transformer, Control	8711-009-006
Main Control Board	9473-010-001
Kit-Replacement, Pressure Sensor (Only)	9732-315-001
VFD & Breaking Resistors Components	**Part Number**
Breaking Resistor 200 Ohms	9483-004-002
Breaking Resistor 160 Ohms	9483-004-003
Delta E Drive Display	9150-044-001
MS 300 VFD Display	9150-058-001
Data Cable (56")	9806-015-003
Drain & Water Valve Components	**Part Number**
Kit - 3" Drain Valve Seal Replacement	9732-327-001
Drain Valve 3"	9379-202-001
Drain Valve 2"	9379-199-001
Water Valve (Dual)	9379-183-012
Water Valve (Single Mueller)	9379-194-001
Diaphragm (Dual)	9118-049-003
Diaphragm (Single Mueller)	9118-055-001
Cabinet Components	**Part Number**
Front Panel Screw	9545-008-014
Front Panel Finisher Washer	8641-585-001
Front Panel Spring Nut	8640-399-008
Top Soap Box Screw (Regular Chassis Only)	9545-008-012
Top Soap Box Spring Nut (Regular Chassis Only)	8640-399-007
5/16 Hex Screw, Common	9545-008-026
Top Lock Key #6324	9306-025-001
Cylinder Plug (1.5" Plastic)	9456-041-007

Section 8:

Parts Data

C-Series Vended

Regular Chassis

Models

WC0300XA-10EC4X	**After Serial # W1.19213.001**
WC0300XA-12EC4X	**After Serial # W1.19211.025**
WC0400XA-12EC4X	**After Serial # W1.19219.027**
WC0600XA-12EC4X	**After Serial # W1.19220.051**

Wiring Harness Part # by Model

Key	Description	T300	T400	T600	QTY
Control Panel Wiring Harnesses					
*	Wiring Harness, Door Lock	9627-791-003	9627-791-003	9627-791-004	1
*	Wiring Harness,CoinDrop Mech				1
*	Wiring Harness, Drain/Thermo/DoorSol	9627-796-001	9627-796-001	9627-796-002	1
*	Wiring Harness, LED PCB to Control Board	9627-797-001	9627-797-001	9627-797-001	1
*	Wiring Harness, Relay Board to Control Board (P20/P21)	9627-793-001	9627-793-001	9627-793-001	1
Control Trough Wiring Harnesses					
*	Wiring Harness, Control Board to Relay Board (P8/P16)	9627-794-001	9627-794-001	9627-794-001	1
*	Wiring Harness, Water Valve to Relay Board (P19)	9627-795-003	9627-795-003	9627-795-004	1
*	Harness, Control Board (P5) to Pressure Switch (-10 120VAC)	9627-908-001			
*	Harness, Control Board (P5) to Pressure Switch	9627-908-002	9627-908-004	9627-908-007	1
*	Wiring Assembly, Fuse (Red 7”)	9631-381-018	9631-381-018	9631-381-018	3
*	Wiring Assembly, Terminal Block to Step-Down Transformer (Blk/Red)	8220-001-232	8220-001-232	8220-001-232	1
*	Wiring Assembly, Terminal Block to Control Transformer (Blk/Blu)	8220-001-231	8220-001-231	8220-001-231	1
*	Harness, Power Terminal Block	9627-747-003	9627-747-003	9627-747-003	1
Rear Channel Wiring Harnesses					
*	Wiring Assembly, Yel. Jumper (Water Valve)	8220-123-001	8220-123-001	8220-123-001	1
*	Data Communication Cable	9806-025-001	9806-025-001	9806-025-001	1
*	Wiring Assembly, Relay Board to VFD (Yel. 32”)	8220-064-023	8220-064-023	8220-064-023	2
*	Wire Assy, VFD to Braking Resistors (Violet, 24”)	8220-118-001			2
*	Cord Assembly, Power (-10 120VAC ONLY)	9802-037-009			1

Cabinet and Front Panel Group Part # by Model

Key	Description	T300	T400	T600	QTY
1	Panel, Side (Left or Right) - stainless		9732-359-006	9732-359-008	2
1	Panel, Right Side-stainless	9989-639-001			1
1	Panel, Left Side - stainless	9989-639-002			1
2	Screw, (Side Panel to Base)	9545-018-018	9545-018-013		6
2	Screw, (Side Panel to Base)			9545-018-013	8
*	Nut, Hex 1/4-20 UNC	8640-414-006	8640-414-006		6
*	Nut, Hex 1/4-20 UNC			8640-414-006	8
*	Pad-Foam, Side Panel	0904-904-001	0904-904-001	0904-904-001	2
3	Vault Assembly, Coin	9942-041-002	9942-041-002	9942-041-002	1
4	Back-Coin Vault	9050-066-001	9050-066-001	9050-066-001	1
*	Screw, #10B x 1/2	9545-008-026	9545-008-026	9545-008-026	8
5	Chute-Coin	9119-032-001	9119-032-001	9119-032-001	1
*	Screw, 10B x 1/4	9545-008-001	9545-008-001	9545-008-001	1
*	Bracket, Side Panel under front panel	9029-263-001	9029-263-001	9029-263-001	1
*	Nut, Hex (to tub front)	8640-413-002	8640-413-002	8640-413-002	2
*	Screw, #10B x 1/2	9545-008-026	9545-008-026	9545-008-026	2
6	Panel, Control (Mounts Nameplate)	9989-557-001	9989-558-001	9989-559-001	1
*	Screw, Control Panel to Sides	9545-008-026	9545-008-026	9545-008-026	4
7	Nameplate Decal, Control Panel (Blue)	9412-208-002	9412-210-002	9412-212-002	1
7	Nameplate Decal, Control Panel (Black)	9412-208-001	9412-210-001	9412-212-001	1
8	Label-Nameplate, RH (Blue)	8502-744-002			1
8	Label-Nameplate, RH (Black)	8502-744-001			1
*	Stop Button Mounting Plate	9452-725-001	9452-725-001	9452-725-001	1
9	Kit-Stop button with harness & Switch	9732-223-001	9732-223-001	9732-223-001	1
10	Accecptor, Coin-Optical switch w/harness	9021-041-001	9021-041-001	9021-041-001	1
*	Retainer-Dual coin Accecptor	9486-149-001	9486-149-001	9486-149-001	2
*	Screws, Coin Accecptor	9545-053-002	9545-053-002	9545-053-002	4
11	Panel Assy, Front	9454-893-001	9454-894-001	9454-895-001	1
*	Trim Edge Protector	9578-092-005	9578-092-005	9578-092-005	1
*	Screw, Hex- To Control Panel	9545-008-031	9545-008-031	9545-008-031	2
*	Nut, Spring- To Control Panel 10/32	8640-399-005	8640-399-005	8640-399-005	4
12	Screw, Flat Head- Front to Sides	9545-008-014	9545-008-014	9545-008-014	2
13	Washer, Finish	8641-585-001	8641-585-001	8641-585-001	2
*	Nut, Spring-To Front Panel	8640-442-001	8640-442-001	8640-442-001	2
14	Label, Door Opening-Blue	8502-757-002	8502-757-002	8502-757-002	1
14	Label, Door Opening-Black	8502-757-001	8502-757-001	8502-757-001	
15	Label, Warning Risk of Injury-Blue	8502-759-002	8502-759-002	8502-759-002	1
15	Label, Warning Risk of Injury-Black	8502-759-001	8502-759-001	8502-759-001	1

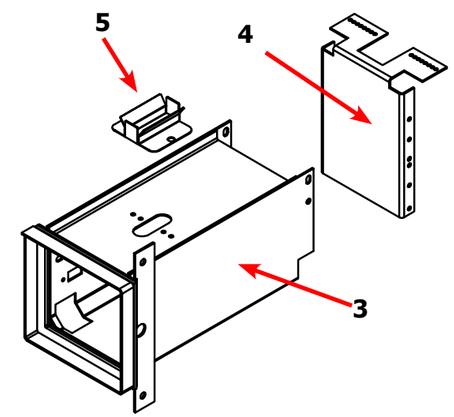

Key	Description	T300	T400	T600	QTY
16	Bumper-Loading door	9051-055-001	9051-055-001	9051-055-001	1
*	Nut, 1/4-20 UNC, 2B	8640-414-006	8640-414-006	8640-414-006	1
17	Door, Lower Service (includes handle & Rivits)	9960-286-001	9960-286-002	9960-286-002	1
18	Handle (bumper guard)	9244-086-001	9244-086-002	9244-086-002	1
*	Rivet	9491-009-003	9491-009-003	9491-009-003	4
19	Screw Mtg., Flat Head	9545-008-014	9545-008-014	9545-008-014	2
20	Washer, Finish	8641-585-001	8641-585-001	8641-585-001	2
*	Nut, Spring	8640-442-001	8640-442-001	8640-442-001	2
21	Coin Box Assy, Blue	9807-099-002	9807-099-002	9807-099-002	1
21	Coin Box Assy, Black	9807-099-004	9807-099-004	9807-099-004	1

Cabinet and Front Panel Group Part # by Model Continued

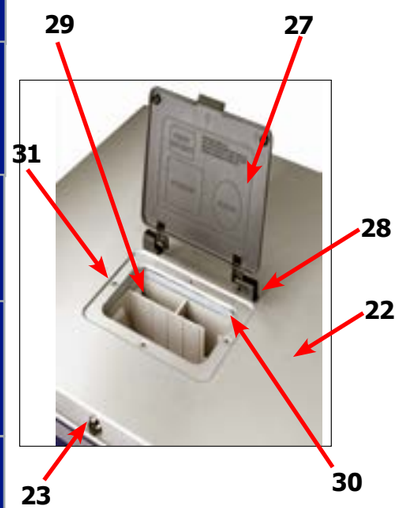

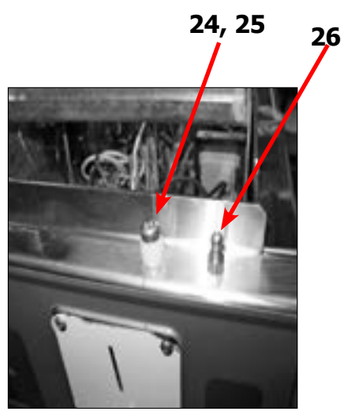

Key	Description	T300	T400	T600	QTY
22	Panel Top, Assembly (includes catch)	9989-563-001	9989-563-003	9989-563-005	1
*	Catch, Top Panel	9086-017-001	9086-017-001	9086-017-001	2
*	Rivit-Catch, Top Panel	8638-190-009	8638-190-009	8638-190-009	4
23	Lock, Top (w/Key)	8650-012-003	8650-012-003	8650-012-003	1
*	Lock Spacer	9538-189-001	9538-189-001	8538-189-001	*
*	Key, Top- # 6324	6292-006-007	6292-006-007	6292-006-007	1
*	Cam, Lock-Top	9095-049-001	9095-049-001	9095-049-001	1
*	Nut, 9/32 - 28 Hex	8640-426-001	8640-426-001	8640-426-001	1
*	Washer Flat 5/16	8641-581-008	8641-581-008	8641-581-008	1
24	Screw, Locator	9545-008-023	9545-008-023	9545-008-023	2
25	Plastic Sleeve, Locator	9355-001-001	9355-001-001	9355-001-001	2
26	Locator Post	9467-024-001	9467-024-001	9467-024-001	2
*	Nut, Locator Post	8640-411-003	8640-411-003	8640-411-003	2
27	Door, Dispenser	9108-095-005	9108-095-005	9108-095-005	1
28	Post, Door Mounting	9467-025-001	9467-025-001	9467-025-001	2
*	Pin, Plain-SS	9451-191-001	9451-191-001	9451-191-001	2
*	Screw, Disp.Post Mtg	9545-045-002	9545-045-002	9545-045-002	4
29	Dispenser, Soap	9122-005-004	9122-005-004	9122-005-004	1
30	Gasket, Dispenser	9206-416-001	9206-416-001	9206-416-001	1
*	Nut,Spring-SS	8640-399-007	8640-399-007	8640-399-007	4
31	Screw, Disp. Mtg	9545-008-012	9545-008-012	9545-008-012	4
*	Flow Restrictor	9475-002-002	9475-002-002	9475-002-002	2
*	Plastic Plug 1 1/2"-(inside cylinder)	9456-041-007	9456-041-007	9456-041-007	1
*	Hose-Dispenser outlet	9242-450-002	9242-450-002	9242-450-002	1
*	Clamp-Hose, #32	8654-117-008			2
32	Bracket, Side Panel under front panel	9029-263-001	9029-263-001	9029-263-001	1
33	Nut, Hex (to tub front)	8640-413-002	8640-413-002	8640-413-002	2
34	Screw, #10B x 1/2	9545-008-026	9545-008-026	9545-008-026	2

Notes

Rear View Access Part # by Model

Key	Description	T300	T400	T600	QTY
1	Drive Motor, 3 Phase (Inverter duty)	9376-307-001	9376-319-001	9376-319-001	1
2	Pulley, Motor	9453-169-012	9453-170-003	9453-170-003	1
*	Set Screw,Sq.Hd(motor pulley)	9545-028-015	9545-028-015	9545-028-015	2
3	Rod, Motor Mtg	9497-222-002	9497-222-002	9497-222-004	1
4	Screw (end of motor rod)	9545-029-005	9545-029-005	9545-029-005	1
*	Lockwasher (end of motor rod)	8641-582-014	8641-582-014	8641-582-014	1
5	Motor Bushing (Rubber) after Serial # 530726	9053-082-001	9053-082-001	9053-082-001	2
6	Clamp-Worm, 316SS, 1.5" (for Rubber bushing) Start #530726	8654-117-019	8654-117-019	8654-117-019	2
7	Strap Bracket, Motor Tension	9029-206-002	9029-206-002	9029-206-002	1
8	Nut, Strap to Motor 10/32 UNF	8640-413-002	8640-413-002	8640-413-002	1
*	Washer #10	8641-581-006	8641-581-006	8641-581-006	1
9	Spring, Belt Tension	9534-319-002	9534-319-002	9534-319-002	1
10	Pulley, Driven	9908-041-002	9453-168-004	9453-168-003	1
*	Tolerance Ring driven pulley	9487-234-002	9487-234-001	9487-234-003	1
11	Screw 1/2-13x 11/4"	9545-017-009	9545-017-009		1
11	Screw 5/8-11x1/1/2" Driven pulley			9545-060-001	1
12	Lockwasher 1/2"	8641-582-016	8641-582-016		1
12	Lockwasher 5/8"			8641-582-018	1
13	Washer, Flat 1/2"	8641-581-026	8641-581-026		1
13	Washer, Flat 5/8x2 1/4"			8641-581-032	1
14	Drive Belt	9040-076-004			1
14	Drive Belt		9040-076-005	9040-076-005	2
15	Channel, Rear	9947-025-001	9947-026-001	9947-026-001	1
16	Screw Mtg rear channel	9545-008-026	9545-008-026	9545-008-026	4
*	Nut, Spring Rear Channel MTG	8640-399-008	8640-399-008	8640-399-008	4
17	Cover, Power Terminal Block	9074-267-001	9074-267-001	9074-267-001	1
18	Screw,	9545-008-026	9545-008-026	9545-008-026	1
19	Hose, Overflow Vent Top	9242-463-001	9242-463-002	9242-463-003	1
20	Clamp, Hose Vent	8654-117-008	8654-117-008	8654-117-008	2
21	Hose, Overflow to drain	9242-449-002	9242-449-002	9242-449-002	1
22	Clamp, Hose overflow to drain	8654-117-018	8654-117-018	8654-117-018	2
23	Hose, Pressure Switch	9242-175-000	9242-175-007	9242-175-001	1
*	Clamp, Pressure Switch Hose	8654-117-015	8654-117-015	8654-117-015	1
*	Vaccuum Breaker Mtg Bracket	9029-266-001	9029-077-001	9029-077-001	1
*	Vaccum Breaker ALL	9610-001-001	9610-001-001	9610-001-001	1
*	Clamp, Hose to Vacuum Breaker	8654-117-014	8654-117-014	8654-117-014	1
24	Hose, Vacuum Breaker to tub	9242-458-001	9242-458-002	9242-458-002	1
25	Plastic Plug 7/8" Electrical Connection	9456-041-006	9456-041-006	9456-041-006	2
26	Bushing, 7/8	9053-067-002	9053-067-002	9053-067-002	1
*	Panel Assy., Back	9454-632-001	9989-562-001		1
*	Panel, Back - Top			9444-014-001	1
*	Panel, Back - Bottom			9444-013-001	1
*	Screw Panel Mtg.#10Bx1/2"	9545-008-026	9545-008-026	9545-008-026	10
*	Nut, Spring	8640-399-004	8640-399-004	8640-399-004	6
*	Screw, To Base-1/4x3/4	9545-030-002	9545-030-002	9545-030-002	3

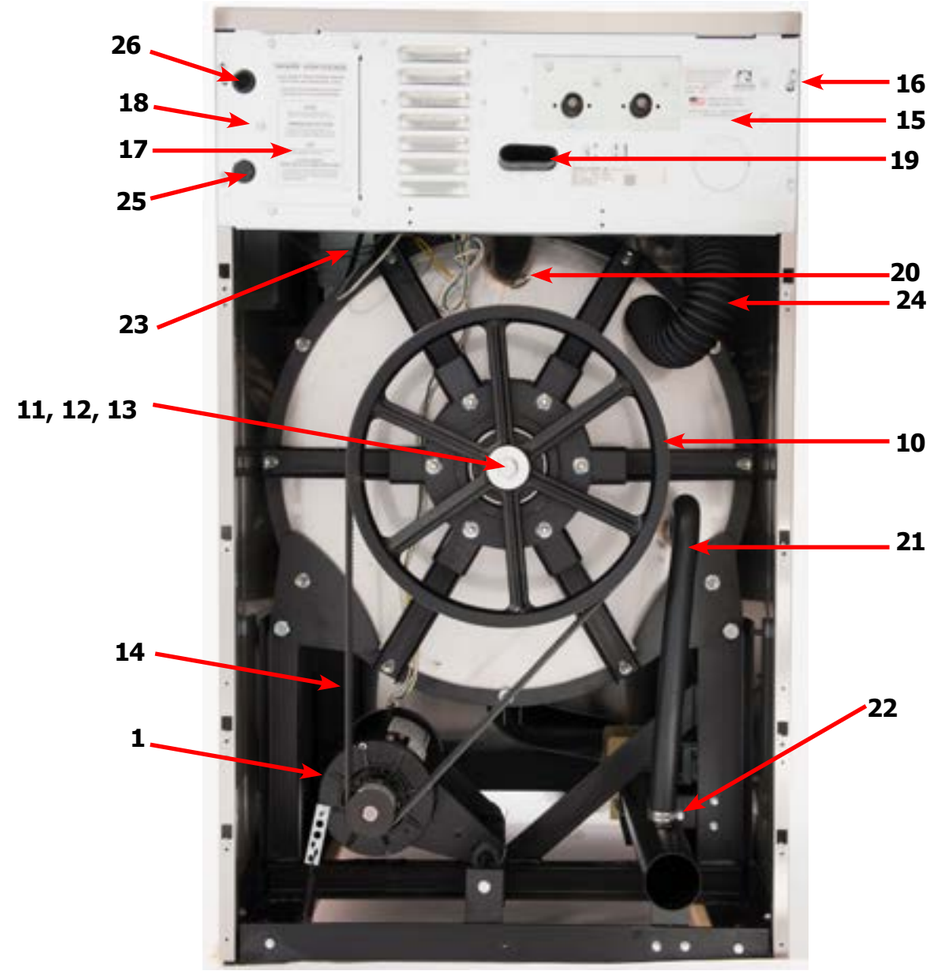

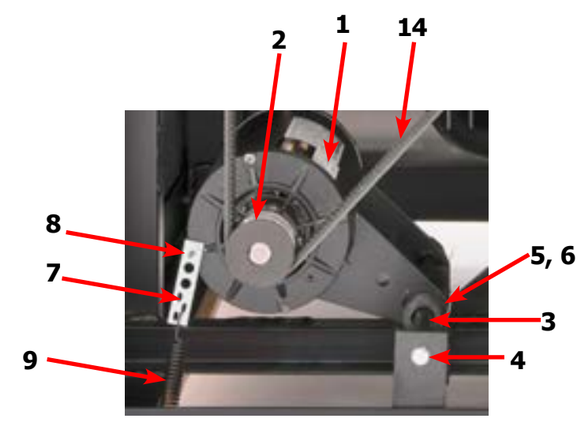

Cylinder, Seals & Bearings Part # by Model

Key	Description	T300	T400	T600	QTY
*	Bearings and Seal Kit	9732-219-001	9732-219-003	9732-219-005	1
*	Housing, Bearing- Assembly (items #2-#6)	9803-182-001	9803-179-002	9803-186-001	1
2	Housing, Bearing	9241-174-002	9241-169-002	9241-180-002	1
3	Bearing, Front (LARGE)	9036-159-001	9036-159-002	9036-159-005	1
4	Bearing, Rear (SMALL)	9036-159-003	9036-159-001	9036-159-004	1
5	Spacer, Bearing	9538-161-001	9538-158-001	9538-167-001	1
6	Ring, Bearing Retainer	9487-238-002	9487-238-001	9487-238-003	1
7	Tub Back Mating Ring	9487-261-001	9487-261-002	9487-261-003	1
8	Seal, Large	9532-140-010	9532-140-009	9532-140-009	1
9	Seal, Small	9532-140-005	9532-140-003	9532-140-006	1
10	Ring, Seal Mounting	9950-047-001	9950-042-001	9950-048-001	1
11	Back Assy, Tub 2 piece	9962-012-001	9962-014-002	9962-013-002	1
12	Bolt, Tub End of Bearing Housing (1/2" x 1 1/4")	9545-017-009	9545-017-009		6
12	Nut 1/2'	8640-417-005	8640-417-005		6
12	Lockwasher 1/2" (ext. tooth)	8641-581-034	8641-582-016		6
12	Bolt 5/8-11x1 1/2" Tub end of bearing housing			9545-060-001	6
12	Washer-Flat, 5/8"			8641-581-040	6
12	Lockwasher 5/8"			8641-582-018	6
12	Nut 5/8"			8640-425-001	6
13	Support Arm Assy, Bearing Housing	9991-049-002	9991-061-002	9991-056-002	6
*	Tub Alignment Spacer	9552-038-003	9552-038-003	9552-038-003	
14	Bolt Pulley End of Bearing Housing (3/8" x 1 1/2")	9545-029-003	9545-029-003		6
14	Nut, Flange Locking 3/8"	8640-415-004	8640-415-004		6
14	Bolt Pulley end of bearing housing (7/16-14x2")			9545-059-002	6
14	Nut, Flange Locking 7/16"			8640-416-005	6
15	Pulley, Driven	9908-041-002	9453-168-004	9453-168-003	1
*	Ring, Tolerance	9487-234-002	9487-234-001	9487-234-003	1
16	Washer 1/2"	8641-581-026	8641-581-026		1
16	Washer 5/8"			8641-581-032	1
17	Bolt 1/2-13 x 1 1/4"	9545-017-009	9545-017-009		1
17	Bolt 5/8-11x11/2"			9545-060-001	1
18	Lockwasher 1/2" Ext. tooth	8641-582-016	8641-582-016		1
18	Lockwasher 5/8 Ext. tooth			8641-582-018	1
*	Cylinder Assy Before Serial # W1.20190.XXX	9732-354-001	9732-354-003	9732-354-006	1
*	Cylinder Assy After Serial # W1.20190.XXX	9848-163-001	9848-165-001	9848-168-001	1
*	Tub and Cylinder Assy.	9869-028-001	9869-030-001	9869-032-001	1
*	Tub Assembly	9930-159-001	9930-161-001	9930-163-001	1

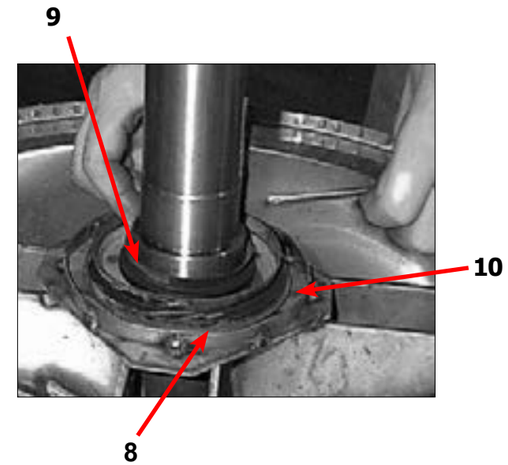

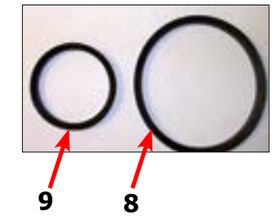

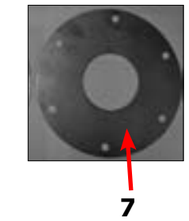

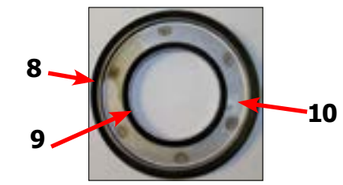

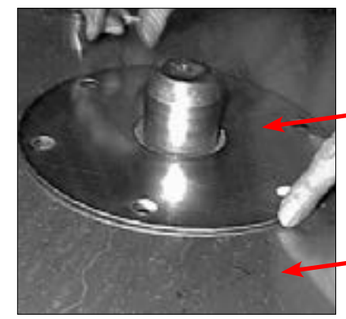

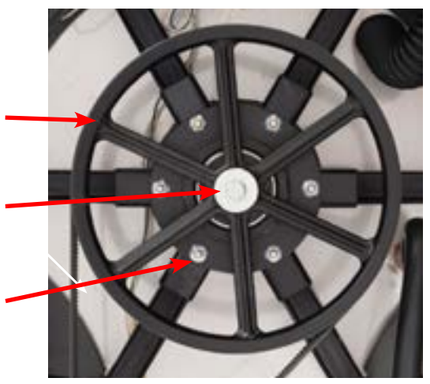

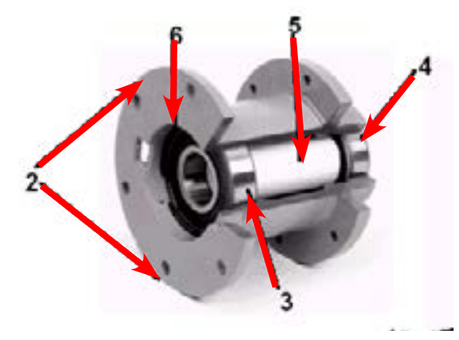

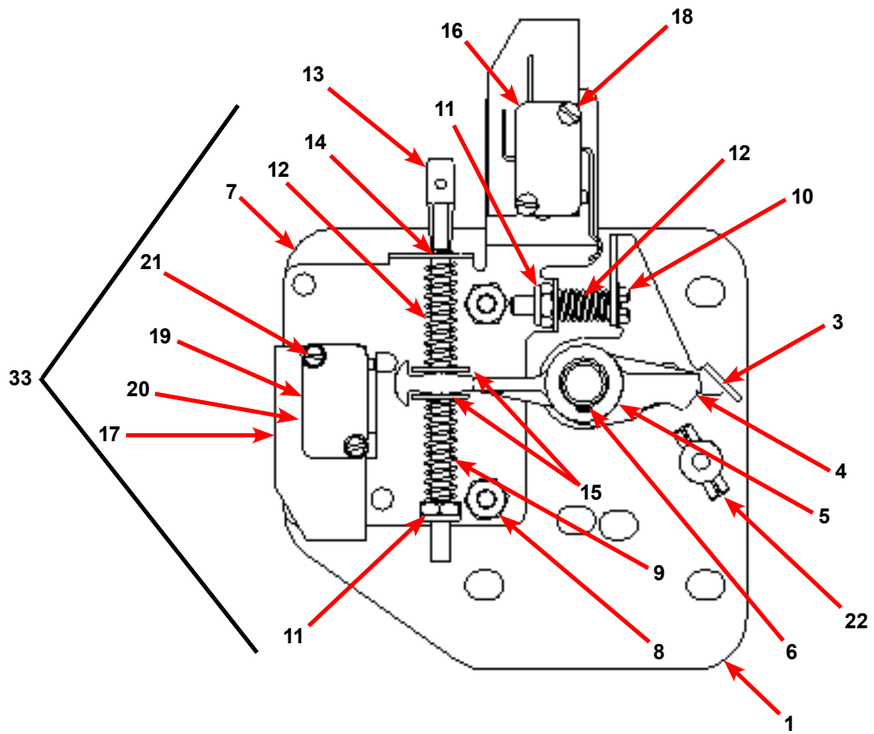

Door Latching Assembly Part # by Model

Key	Description	T300	T400	T600	QTY
33	Latching Assy, Complete (#1-22) (includes #1 thru #22)	9885-024-001	9885-024-001	9885-024-001	1
1	Plate Assy, Door Lock	9982-346-001	9982-346-001	9982-346-001	1
2	Washer, Flat	8641-581-030	8641-581-030	8641-581-030	1
3	Actuator, Latching Switch	9008-005-001	9008-005-001	9008-005-001	1
4	Pawl, Locking	9732-346-002	9732-346-002	9732-346-002	1
5	Washer, Spring	8641-569-003	8641-569-003	8641-569-003	1
6	Ring, Retaining	9487-200-004	9487-200-004	9487-200-004	1
7	Bracket Switch	9029-163-001	9029-163-001	9029-163-001	1
8	Nut, Hex 10-32 UNF	8640-413-002	8640-413-002	8640-413-002	2
9	Spring, Actuating	9534-364-002	9534-364-002	9534-364-002	1
*	Door Stud Pin, 3/16" x 3/4"	9451-181-004	9451-181-004	9451-181-004	1

Door Latching Assembly Part # by Model Cont.

Key	Description	T300	T400	T600	QTY
10	Screw, Hx. 10-32 x 1"	9545-012-020	9545-012-020	9545-012-020	1
11	Nut, Elastic Stop 10-32	8640-413-004	8640-413-004	8640-413-004	2
12	Spring, Return	9534-364-001	9534-364-001	9534-364-001	2
13	Pin, Guide	9451-193-001	9451-193-001	9451-193-001	1
14	Ring, Retaining	9487-200-005	9487-200-005	9487-200-005	1
15	Washer	8641-581-031	8641-581-031	8641-581-031	1
16	Switch, Latching Sensing	9539-461-008	9539-461-008	9539-461-008	1
17	Shield, Switch	9550-169-003	9550-169-003	9550-169-003	3
18	Screw 4-40 x 5/8"	9545-020-001	9545-020-001	9545-020-001	2
18	Nut, Twin 4-40	8640-401-001	8640-401-001	8640-401-001	1
19	Switch, Locking Sensing	9539-461-007	9539-461-007	9539-461-007	2
20	Actuator, Switch Locking	9008-006-003	9008-006-003	9008-006-003	1
21	Screw 4-40 x 1 1/8"	9545-020-003	9545-020-003	9545-020-003	2
21	Nut, Twin 4-40	8640-401-001	8640-401-001	8640-401-001	1
*	Spacer Sensor	9538-182-001	9538-182-001	9538-182-001	*
22	Pin, Dowel	9451-181-004	9451-181-004	9451-181-004	1
*	Shim, Door Lock, Thin	9552-037-001	9552-037-001	9552-037-001	AR
*	Screw, Lock mtg 1/4"-20 x 3/4"	9545-018-004	9545-018-004	9545-018-004	3
*	Lockwasher 1/4" Ext tooth	8641-582-007	8641-582-007	8641-582-007	3
*	Harness Door-Switches, P4	9627-791-003	9627-791-003	9627-791-004	1
	Switch, Door Hinge	9539-492-001	9539-492-001	9539-492-001	1
	Wire Assy, Red	8220-063-025	8220-063-025	8220-063-025	1

Gear Motor Door Lock Assembly

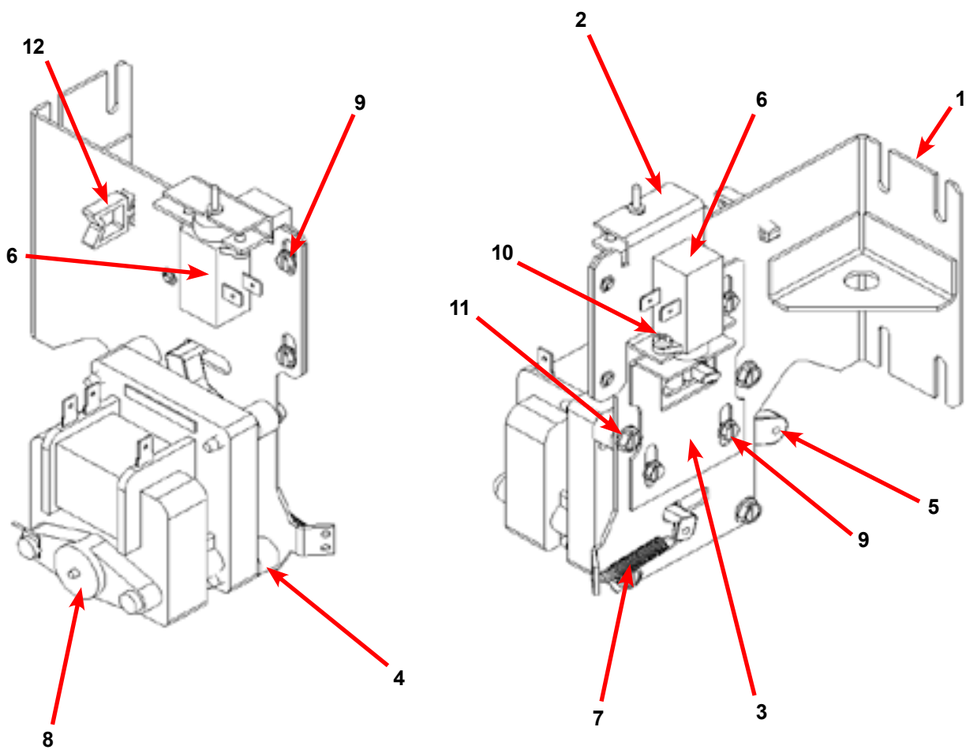

Key	Description	T300	T400	T600	QTY
*	Actuator Assembly (Includes 1-10, Rod NOT included)	9892-015-001	9892-015-001	9892-015-001	1
1	Bracket Assy, Slide Lock Actuator	9985-190-001	9985-190-001	9985-190-001	1
2	Bracket Assy, Slide - Unlock	9985-189-001	9985-189-001	9985-189-001	1
3	Bracket Slide Lock	9029-204-001	9029-204-001	9029-204-001	1
4	Spacer, Plastic	9538-157-021	9538-157-021	9538-157-021	4
5	Arm - Door Lock	9001-063-001	9001-063-001	9001-063-001	1
6	Thermoactuator - Door Lock Relay 120v	9586-001-001	9586-001-001	9586-001-001	2
7	Spring - Extension	9534-350-001	9534-350-001	9534-350-001	1
8	Motor & Gear Assembly 120v	9914-137-015	9914-137-015	9914-137-015	1
9	Screw -Hxwshrhdslsems, 6-32 x 3/16	9545-044-003	9545-044-003	9545-044-003	6
10	Cross Recessed PAn Hd Tapping screw	9545-031-011	9545-031-011	9545-031-011	4
11	Screw hxwshdsl, 10-24 - 1.25f, ctd	9545-046-007	9545-046-007	9545-046-007	4
12	Standoff-Wire	9527-007-001	9527-007-001	9527-007-001	1
*	Rod, Door Lock	9497-225-011	9497-225-012	9497-225-010	1
*	Harness, Door Lock/Drain, P17	9627-796-001	9627-796-001	9627-796-002	1

Notes

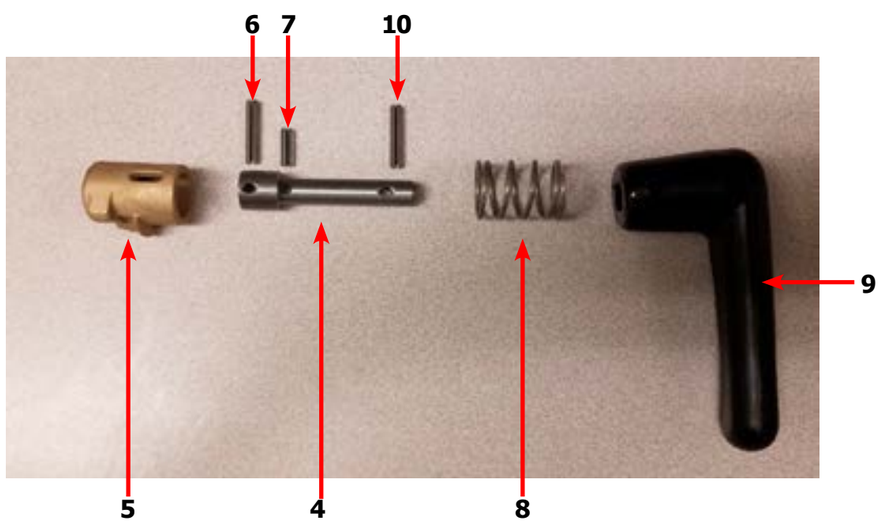

Loading Door Part # by Model

Key	Description	T300	T400	T600	QTY
*	Loading Door, Complete #1-10	9960-308-001	9960-309-001	9960-309-001	1
1	Loading Door, Ring	9487-264-002	9487-265-002	9487-265-002	1
2	Gasket, Loading Door	9206-411-002	9206-419-001	9206-419-001	1
3	Window, Loading Door	9635-018-001	9635-016-001	9635-016-001	1
*	Shaft Assy, Locking (includes 4 thru 7)	9913-136-001	9913-136-001	9913-136-001	1
4	Shaft, Door Locking	9537-195-002	9537-195-002	9537-195-002	1
5	Cam, Locking	9095-040-002	9095-040-002	9095-040-002	1
6	Pin, Groove (1 1/4)	9451-181-005	9451-181-005	9451-181-005	1
7	Pin, Groove (3/4)	9451-181-004	9451-181-004	9451-181-004	1
8	Spring, Lock Cam	9534-360-002	9534-360-002	9534-360-002	1
9	Handle, Door	9244-091-001	9244-091-001	9244-091-001	1
10	Pin, Door Handle (groove)	9451-181-005	9451-181-005	9451-181-005	1
11	Door Hinge Assembly Mounts to Tub Front	9955-030-001	9955-030-001	9955-030-001	
*	Shim, Loading Door Hinge (Thin)	9552-036-001	9552-036-001	9552-036-001	2
*	Screw, 5/16-18x3/4	9545-014-009	9545-014-009	9545-014-009	3
*	Lock Washer, 5/16	8641-582-009	8641-582-009	8641-582-009	3
12	Leaf Assembly-Hinge, Top	9845-008-001	9845-008-001	9845-008-001	1
13	Leaf Assembly-Hinge, Bottom	9845-005-002	9845-005-002	9845-005-002	1
*	Screw, 5/16x5/8	9545-056-002	9545-056-002	9545-056-002	3
14	Bumper-Loading Door	9051-055-001	9051-055-001	9051-055-001	1
*	Nut, 1/4, 20UNC, 2B	8640-414-006	8640-414-006	8640-414-006	1

Loading Door Hinge 180 Degree Opening

Key	Description	T300	T400	T600	QTY
1	Door Hinge Assembly (mounts to tub front)	9955-030-001	9955-030-001	9955-030-001	1
*	Shim, Loading Door Hinge (Thin)	9552-036-001	9552-036-001	9552-036-001	2
*	Screw, 5/16-18x3/4	9545-014-009	9545-014-009	9545-014-009	3
*	Lock Washer, 5/16	8641-582-009	8641-582-009	8641-582-009	3
2	Leaf Assembly-Hinge, Top	9845-008-001	9845-008-001	9845-008-001	1
3	Leaf Assembly-Hinge, Bottom	9845-005-002	9845-005-002	9845-005-002	1
4	Screw, 5/16x5/8	9545-056-002	9545-056-002	9545-056-002	3
*	Red Wire (Door Close Switch)	8220-063-025	8220-063-025	8220-063-025	1
*	Black Wire (Door Close Switch)	8220-063-026	8220-063-026	8220-063-026	1
5	Switch, Door Hinge Close (Plunger)	9539-492-001	9539-492-001	9539-492-001	1
6	Door Ring	9487-264-002	9487-265-002	9487-265-002	1
7	Gasket, Door Glass	9206-411-002	9206-419-001	9206-419-001	1
8	Window, Cloths	9635-018-001	9635-016-001	9635-016-001	1
9	Trim Edge Protector	9578-092-004	9578-092-005	9578-092-005	1
*	Bumper-Loading Door	9051-055-001	9051-055-001	9051-055-001	1
*	Nut, 1/4, 20UNC, 2B	8640-414-006	8640-414-006	8640-414-006	1

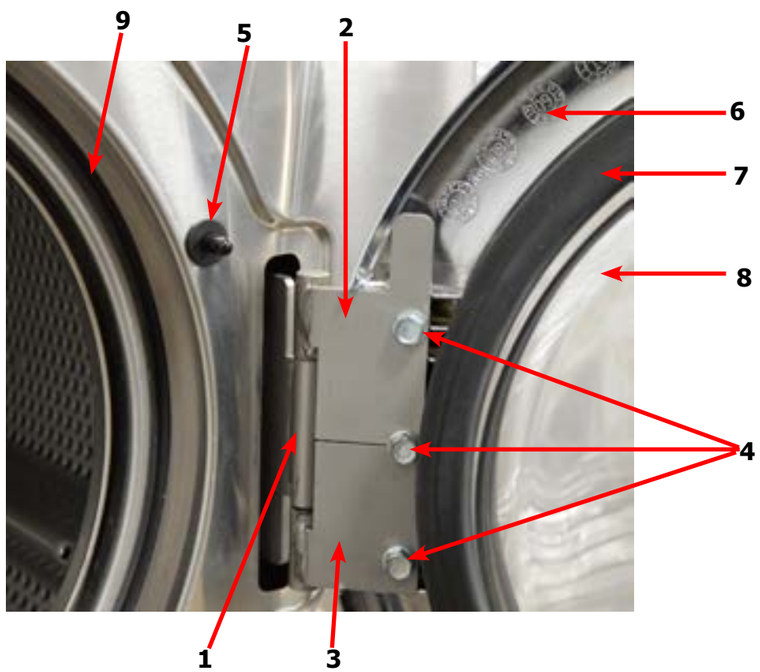

Notes

Notes

Drain Valve Group Part # by Model

Key	Description	T300	T400	T600	QTY
1	Valve, Drain (includes #2 thru #11)	9379-199-001	9379-202-001	9379-202-001	1
2	Body, Valve (w/ball)	9064-068-002	9064-072-001	9064-072-001	1
3	Motor & Gear Train (complete)	9914-137-020	9914-137-023	9914-137-023	1
4	Plate, Motor Mtg	9452-538-001	9452-538-001	9452-538-001	1
5	Screw	8639-994-001	8639-994-001	8639-994-001	3
6	Spring, Drive	9534-340-001	9534-339-001	9534-339-001	1
7	Screw	9545-054-001	9545-054-001	9545-054-001	2
8	Screw	9545-054-002	9545-054-002	9545-054-002	1
9	Seal, V Packer	9532-134-001	9532-134-001	9532-134-001	2
10	Washer	8641-584-001	8641-584-001	8641-584-001	1
11	Pin, Main Drive	9451-196-001	9451-196-001	9451-196-001	1
*	Plate (spacers needed for replacement motor mtg. plate)	9538-149-001	9538-149-001	9538-149-001	4
12	Kit - Seal Replacement	9732-327-001	9732-327-001	9732-327-001	1

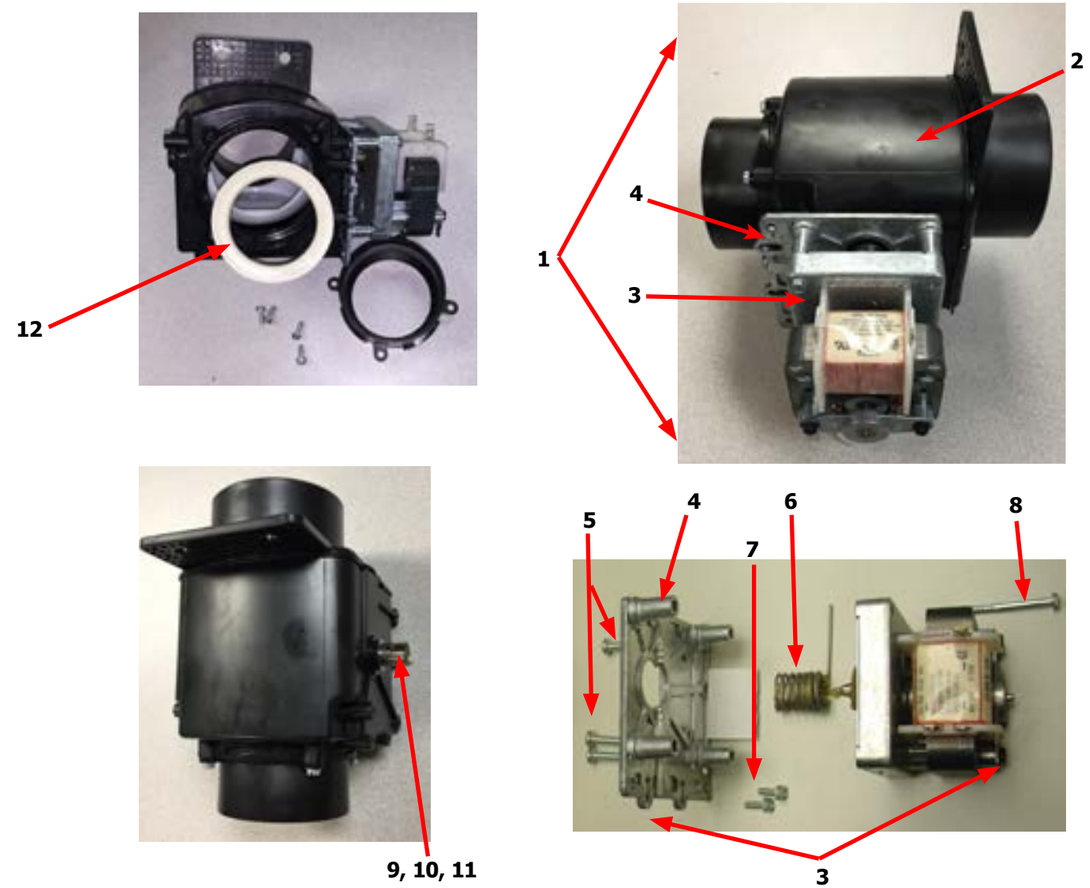

Chassis and Drain Part # by Model

Key	Description	T300	T400	T600	QTY
1	Base Assy,Frame	9945-093-002	9945-140-002	9945-097-002	1
2	Outer Tub Assy	9930-174-002	9930-161-001	9930-163-001	1
3	Tub & Cylinder Assy	9869-038-001	9869-030-001	9869-032-001	1
4	Ring Assy, Tub Mtg-Front	9950-045-002	9950-051-004	9950-051-004	1
5	Bolt, 1/2-13x1 1/4 (Ring to Base)	9545-017-009			4
5	Nut, Wizlock, 1/2-13 (Ring to Base)	8640-417-005			4
5	Bolt, 5/8-11x1 1/2 (Ring to Base)		9545-060-001	9545-060-001	4
5	Nut, Wizlock, 5/8-11 (Ring to Base)		8640-425-001	8640-425-001	4
*	Ring Assembly, Tub Mounting, Rear	9487-247-002	9487-232-004	9950-049-002	1
6	Back Ass'y, Tub	9962-012-001	9962-014-001	9962-013-002	1
7	Ring Assy.Clamp Tub Mtg.- Rear	9950-046-002	9950-056-002	9950-056-002	1
8	Bolt, 3/8-16x1 1/2	9545-029-003			12
8	Nut, Wizlock, 3/8-16	8640-415-004			12
8	Bolt, 7/16-14 x 2		9545-059-002	9545-059-002	12
8	Nut, Wizlock, 7/16-14		8640-416-005	8640-416-005	12
8	Lockwasher			8641-582-018	4
8	Nut, Hex 5/8-11		8640-425-001	8640-425-001	4
*	Shim, Support Assembly (thin)	9552-038-003	9552-038-003	9552-038-001	AR
9	Hose, Tub to Drain Valve	9242-468-001	9242-456-001	9242-456-001	1
10	Clamp, Hose (Tub to Drain Valve)	8654-117-014	8654-117-014	8654-117-014	2
11	Valve, Drain	9379-199-001	9379-202-001	9379-202-001	1
12	Hose, Drain Valve to Tube	9242-451-002	9242-457-001	9242-457-001	1
13	Clamp, Hose (Drain Valve to Tube)	8654-117-014	8654-117-014	8654-117-014	2
14	Bracket, Drain Valve	9029-005-001	9029-056-001	9029-030-002	1
*	Screw, Valve to Bracket 12ABx1/2	9545-008-026	9545-031-010	9545-030-002	2
15	Tube Assy, Drain	9915-116-004	9915-119-002	9915-118-002	1
16	Screw Tube (Bracket to Base 1/4Bx3/4	9545-030-002	9545-030-002	9545-030-002	2
17	Hose, Overflow to drain	9242-449-002	9242-449-002	9242-449-002	1
18	Clamp, Overflow Hose	8654-117-015	8654-117-015	8654-117-015	1
19	Fill Hose, Vacuum Brkr. to Tub	9242-458-001	9242-458-002	9242-458-002	1
*	Dispenser Soap	9122-005-004	9122-005-004	9122-005-004	1
*	Gasket, Dispenser	9206-416-001	9206-416-001	9206-416-001	1
*	Nut Spring SS	8640-399-007	8640-399-007	8640-399-007	4
20	Hose, Dispenser to Tub	9242-450-002	9242-450-002	9242-450-001	1
*	Clamp, Dispenser Hose	8654-117-008	8654-117-008	8654-117-008	2
21	Hose, Pressure Switch	9242-175-000	9242-175-007	9242-175-001	1
*	Clamp, Pressure Switch Hose	8654-117-015	8654-117-015	8654-117-015	1

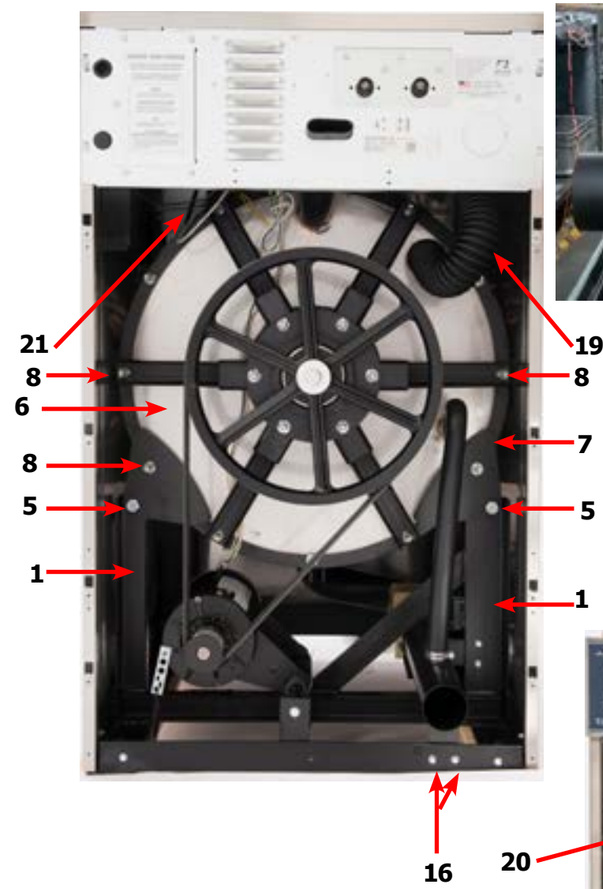

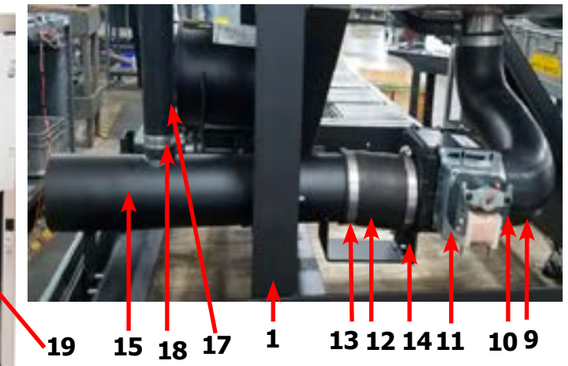

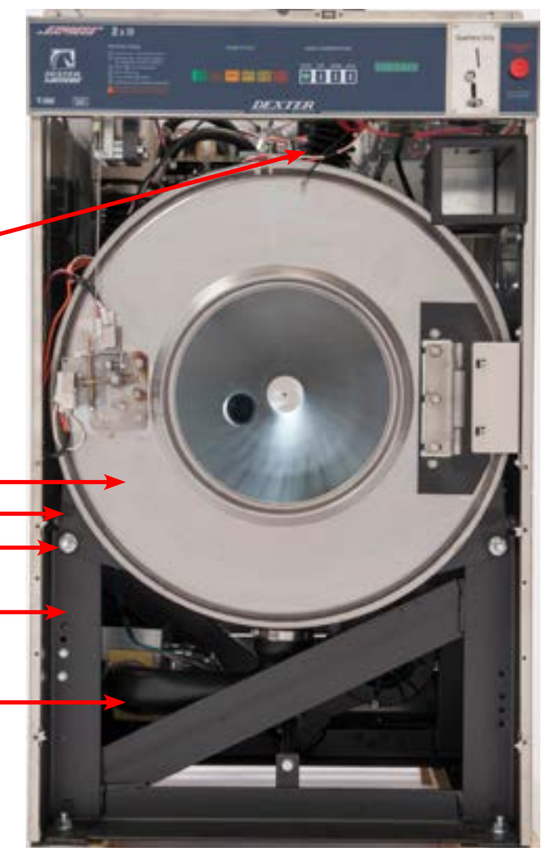

Notes

Water Inlet Valve Breakdown Part # by Model

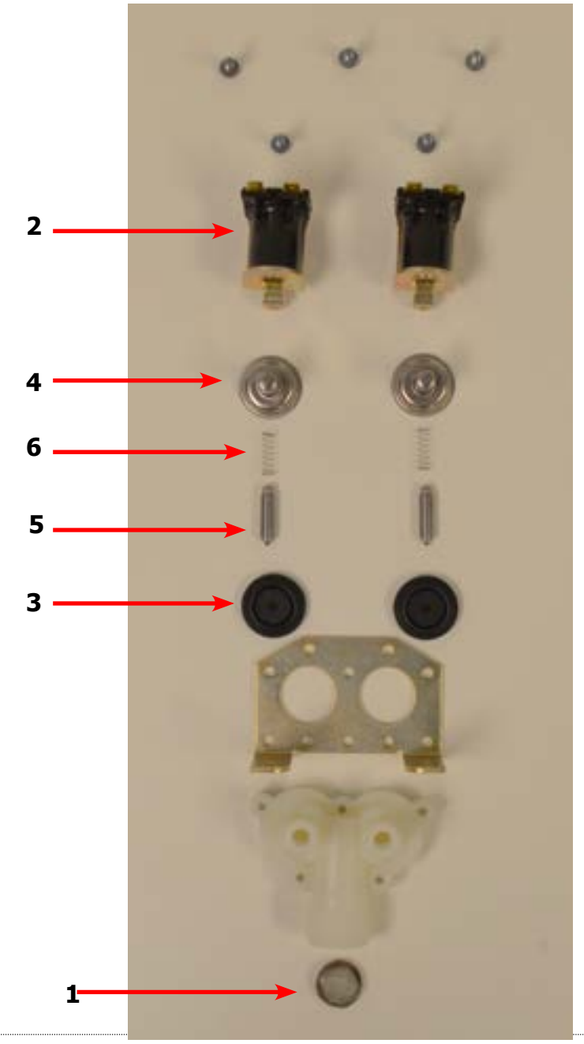

Key	Description	T300	T400	T600	QTY
*	Valve, Water Inlet (includes 1 thru 6)	9379-183-012	9379-183-012	9379-183-012	2
1	Screen, Inlet end of valve	9555-056-001	9555-056-001	9555-056-001	2
2	Coil Assy., 120 V Invensys	9089-017-001	9089-017-001	9089-017-001	2
3	Diaphragm Invensys (Viton)	9118-049-002	9118-049-002	9118-049-002	2
3	Diaphragm Invensys (EPDM)	9118-049-001	9118-049-001	9118-049-001	2
3	Diaphragm Invensys (EPDM NSF)	9118-049-003	9118-049-003	9118-049-003	2
4	Guide, Solenoid Invensys	9211-021-002	9211-021-002	9211-021-002	2
5	Armature Invensys	9015-008-001	9015-008-001	9015-008-001	2
6	Spring, Armature Invensys	9534-298-001	9534-298-001	9534-298-001	2

Water Inlet & Rear Channel

Key	Description	T300	T400	T600	QTY
1	Channel Assembly, Rear	9947-025-001	9947-026-001	9947-026-001	1
2	Screw, #10B x 1/2	9545-008-026	9545-008-026	9545-008-026	4
*	Nut, Spring	8640-399-007	8640-399-007	8640-399-007	4
3	Mounting Plate Water Valves	9452-813-001	9452-813-001	9452-813-001	1
4	Nut-Elastic stop, #10-32	8640-413-004	8640-413-004	8640-413-004	2
5	Valve, Water Inlet (dual outlet) (see Water Inlet Valve Breakdown for individual parts)	9379-183-012	9537-195-002	9537-195-002	2
6	Screw, Valve Mtg	9545-008-026	9545-008-026	9545-008-026	4
7	Wire-Assy, Jumper, Yellow	8220-123-001	8220-123-001	8220-123-001	1
8	Shield over Water Valves Plastic	9550-194-001	9550-194-001	9550-194-001	1
9	Push Clip	9083-121-001	9083-121-001	9083-121-001	2
10	Vacuum Breaker	9610-001-001	9610-001-001	9610-001-001	1
*	Bracket, Vacuum Breaker	9029-266-001	9029-077-001	9029-077-001	1
*	Vacuum Breaker Cap (Red)	0935-135-002	0935-135-002	0935-135-002	*
11	Screw, #10B x 1/2	9545-008-026	9545-008-026	9545-008-026	4
*	Clamp, Hose to Vacume Braker	8654-117-015	8654-117-015	8654-117-015	1
*	Hose, Vacuum Breaker to Tub	9242-458-001	9242-458-002	9242-458-002	1
*	Clamp, Tub End	8654-117-009	8654-117-009	8654-117-009	1
12	Hose, Valve to Vac. Braker	9242-453-020	9242-453-020	9242-453-020	4
*	Hose, Cold, Vac. Brkr. dispenser	9242-453-013	9242-453-016	9242-453-009	1
*	Hose, Hot, Vac. Brkr. dispenser	9242-453-007	9242-453-017	9242-453-008	1
13	Clamp, Hose-Worm	8654-117-015	8654-117-015	8654-117-015	12
14	Hose, overflow Suds	9242-463-003	9242-463-003	9242-463-003	4
*	Clamp, Hose-Spring (overflow to tub back)	8654-117-018	8654-117-018	8654-117-018	2
15	Plate Assembly, Drive Mounting	9452-847-001	9452-847-001	9452-847-001	1
16	Nut-#10-32UNF, 2B	8640-413-002	8640-413-002	8640-413-002	4
17	VFD Delta "MS300" drive 120 volt	9375-033-002			1
*	VFD Cooling Fan	9189-016-001			1
17	VFD Delta "MS300" drive 208-240 volt	9375-034-002	9375-035-002	9375-035-005	1
*	VFD Cooling Fan	9189-015-001	9189-016-001	9189-016-001	1
*	Key Pad-Display Delta "MS300" Drive	9150-058-001	9150-058-001	9150-058-001	1
18	Cable-Data, Communication	9806-025-001	9806-025-001	9806-025-001	1
19	Bushing, 7/8	9053-067-002	9053-067-002	9053-067-002	1
*	Cord assembly (-10 model only)	9802-037-009	N/A	N/A	1
20	Clip Strain Relif	8618-037-001	N/A	N/A	1
21	Plug, 7/8	9545-041-006	9545-041-006	9545-041-006	1
22	Bracket, Terminal-Mounting	9029-265-001	9029-265-001	9029-265-001	1
23	Screw, #10B x 1/2	9545-008-026	9545-008-026	9545-008-026	4
24	Label-Warning	8502-639-001	8502-639-001	8502-639-001	1
25	Strip-Terminal Marker	9558-025-001	9558-025-001	9558-025-001	1
26	Terminal Block	9897-033-002	9897-033-002	9897-033-002	1
27	Screw-Phillips, 6ABx3/4	9545-031-010	9545-031-010	9545-031-010	2
28	Harness-Power, Terminal Block	9627-747-003	9627-747-003	9627-747-003	1
29	Bushing, 1"	9053-067-004	9053-067-004	9053-067-004	1
30	Terminal Lug, Solderless	8652-134-001	8652-134-001	8652-134-001	1
31	Lock-Washer Extooth #10	8641-582-006	8641-582-006	8641-582-006	1
31	Screw, #10-32 TTX 1/2 GRN	9545-008-027	9545-008-027	9545-008-027	1
32	Bushing, 3/4	9053-067-002	9053-067-002	9053-067-002	1

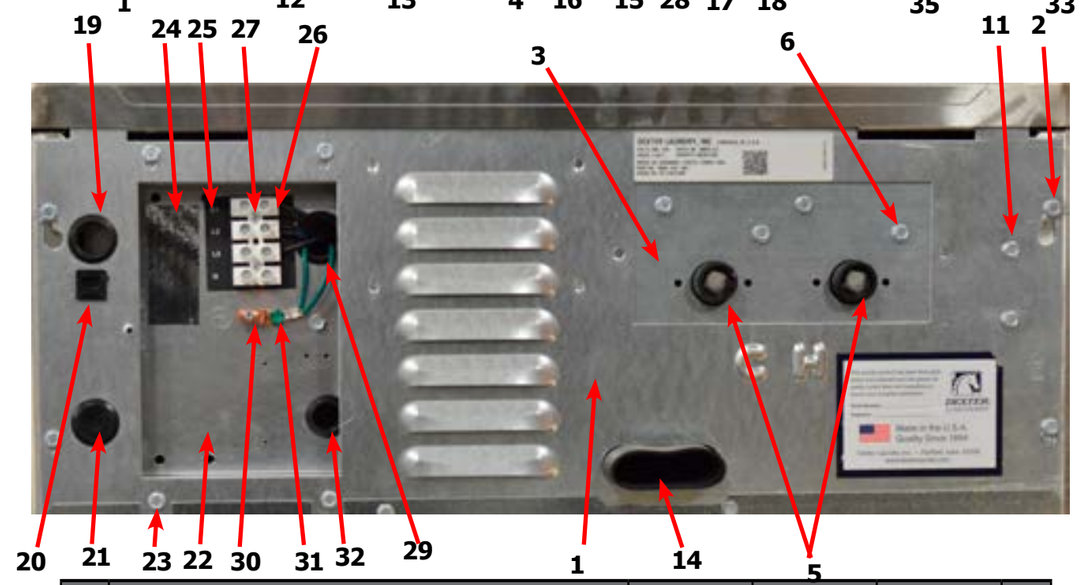

Key	Description	T300	T400	T600	QTY
33	Braking resistors (200 ohm) (-10)	9483-004-002			1
33	Braking resistors (200 ohm)	9483-004-002	9483-004-002	9483-004-002	2
34	Screw-#10Bx1/2	9545-008-026	9545-008-026	9545-008-026	4
*	Wire Assy -Violet, (24" T300-10)	8220-118-001	N/A	N/A	2
35	Wire Assy, Jumper	8220-117-002	8220-117-002	8220-117-002	2
36	Screw, #6-32x5/16	9545-044-006	9545-044-006	9545-044-006	4
37	Nut, #6-32	8640-411-003	8640-411-003	8640-411-003	4
*	Cover Controls	9074-267-001	9074-267-001	9074-267-001	1
*	Screw-#10Bx1/2	9545-008-026	9545-008-026	9545-008-026	1
*	Label-Warning, Notice	8502-761-001	8502-761-001	8502-761-001	1

Key	Description	T300	T400	T600	QTY
1	Trough Assy,Controls 120 Volt (all parts below 7-28 & trough)	9857-200-001			1
1	Trough Assy,Control 208-240 volt (all parts below 7-28 & trough)	9857-254-001	9587-256-001	9857-258-001	1
*	Trough only	9839-018-001	9839-018-001	9839-018-001	1
*	Screw, Trough Sides	9545-008-026	9545-008-026	9545-008-026	4
*	Lockwasher #10	8641-582-006	8641-582-006	8641-582-006	4
2	Angle Support Trough	9003-337-001	9003-337-001	9003-271-001	1
*	Screw, Trough Bracket	9545-008-026	9545-008-026	9545-008-026	3
3	Screw GRN. #10-32x 1/2"	9545-008-027	9545-008-027	9545-008-027	1
*	Lockwasher #10	8641-582-006	8641-582-006	8641-582-006	1
4	Transformer, Control 208/240 (Secondary Voltage to 115 volts)	8711-004-001	8711-004-001	8711-004-001	1
5	Screw, Mtg #10Bx1/2"	9545-008-026	9545-008-026	9545-008-026	4
*	Lockwasher #10	8641-582-006	8641-582-006	8641-582-006	4
6	Wire Assy-BLK/RED, 8 1/2"	8220-001-230	8220-001-230	8220-001-230	1
7	Wire Assy-BLK/BLUE, 8 1/2"	8220-001-231	8220-001-231	8220-001-231	1
8	Terminal Block Assy, POWER	9897-026-004	9897-026-004	9897-026-004	1
*	Screw, Mtg 8Bx3/8"	9545-045-012	9545-045-012	9545-045-012	2
9	Wire Assy, RED, #36, 7"	9631-381-018	9631-381-018	9631-381-018	3
10	Fuse Holder	9200-001-002	9200-001-002	9200-001-002	1
*	Fuse 1.5 amp	8636-018-001	8636-018-001	8636-018-001	1
*	Label Fuse 1.5 amp	8502-716-001	8502-716-001	8502-716-001	1
11	PCB assembly Relay Main	9473-006-001	9473-006-001	9473-006-001	1
*	Support-PCB, 3/8 Edge Holding	9548-285-001	9548-285-001	9548-285-001	6
12	Harness Drain/Therm/Sol, P17	9627-796-001	9627-796-001	9627-796-002	1
13	Screw GRN. #10-32x 1/2"	9545-008-027	9545-008-027	9545-008-027	1
*	Lockwasher #10	8641-582-006	8641-582-006	8641-582-006	1
*	Lug, Grounding	8652-130-037	8652-130-037	8652-130-037	1
14	Harness P19/Water Valve	9627-795-003	9627-795-003	9627-795-004	1
15	Harness P8/P16	9627-794-001	9627-794-001	9627-794-001	1
16	Harness P20/P21	9627-793-001	9627-793-001	9627-793-001	1
17	Bushing , Wire 7/8	9053-067-002	9053-067-002	9053-067-002	2
18	Standoff Twistlock	9527-002-002	9527-002-002	9527-002-002	4
19	Harness P5/Pressure -10	9627-908-001			
20	Harness P5/Pressure	9627-908-002	9627-908-004	9627-908-007	1
*	Harness Doorlock, Switch P4/P15	9627-791-003	9627-791-003	9627-791-004	1
21	Transformer, (Step Down)120VAC / 24 VAC 50/60hz	8711-009-006	8711-009-006	8711-009-006	1
22	Screw, Transformer #8Bx1/4"	9545-045-001	9545-045-001	9545-045-001	2
*	Lockwasher #6 exttooth	8641-582-005	8641-582-005	8641-582-005	2
23	PCB assembly Control /Display	9473-010-001	9473-010-001	9473-010-001	1
*	Kit-Pressure Sensor, Electronic	9732-314-001	9732-314-001	9732-314-001	1
24	Kit-Repacement, Pressure Sensor (only)	9732-315-001	9732-315-001	9732-315-001	1
*	Support-PCB, 3/8", Edge Holding	9548-285-001	9548-285-001	9548-285-001	1
25	Screw, #8B x 1/4"	9545-045-001	9545-045-001	9545-045-001	1
*	Wire Assy BLK/BLU	8220-001-233	8220-001-233	8220-001-233	1
*	Wire Assy RED/BLU	8220-001-232	8220-001-232	8220-001-232	1

Electrical Components - Top Compartment

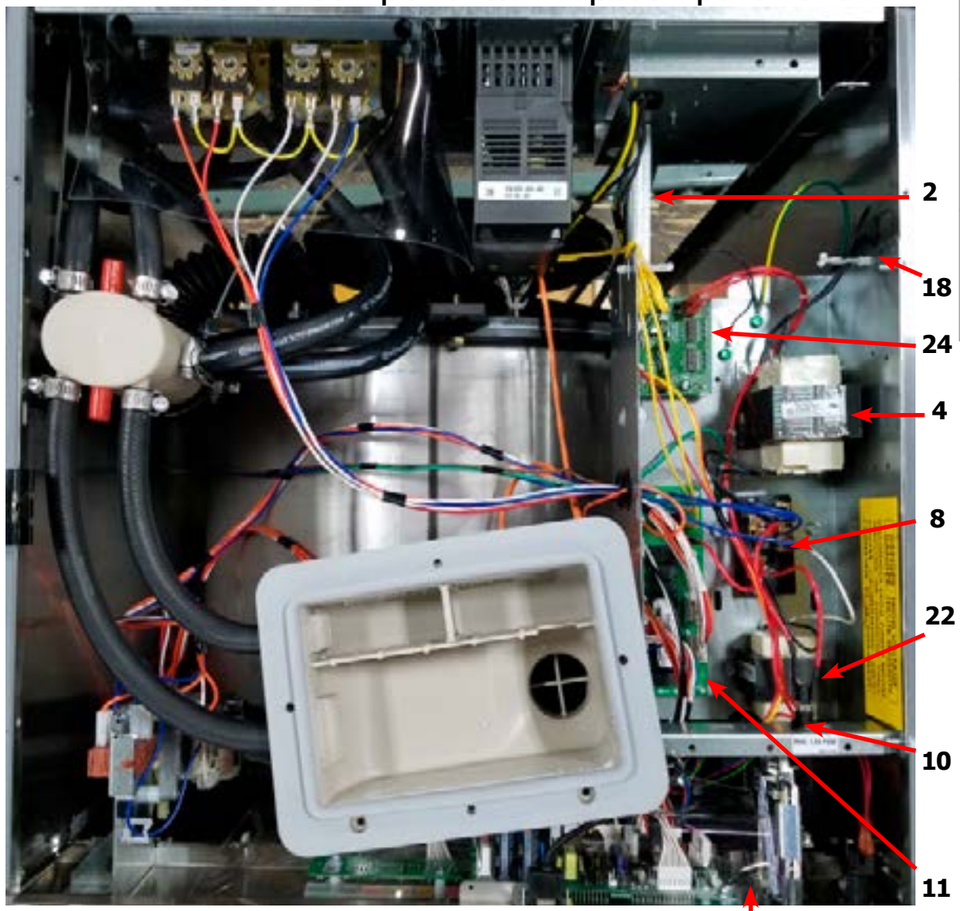

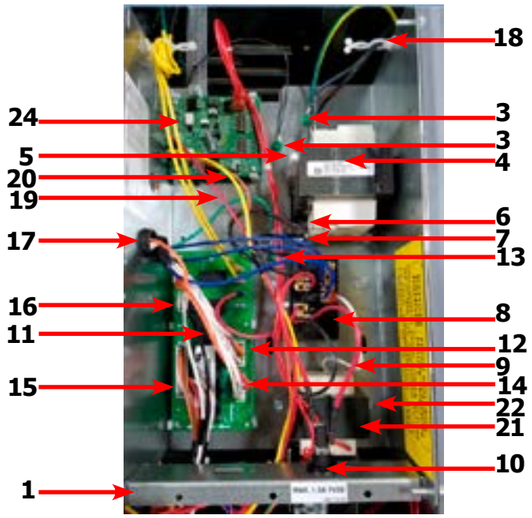

Electronic Pressure Sensor

Control Panel Part # by Model

Key	Description	T300	T400	T600	QTY
1	Panel Control Assembly(panel only)	9989-557-001	9989-558-001	9989-559-001	1
*	Screw, to Side Panels 5/16, Hxwshrhdundct #10Bx 1/2"	9545-008-026	9545-008-026	9545-008-026	4
2	Plate-Latch, Top	9452-625-001	9452-625-001	9452-625-001	1
3	Nut, #8-32	8640-412-005	8640-412-005	8640-412-005	2
4	Post Locator Top	9467-024-001	9467-024-001	9467-024-001	2
5	Nut Hexkeps #6-32	8640-411-003	8640-411-003	8640-411-003	2
6	Locator Panel	9355-001-001	9355-001-001	9355-001-001	2
7	Screw FillHDCR 10Bx1/2" Guide	9545-008-023	9545-008-023	9545-008-023	2
8	Spacer Pushbutton (Micro)	9538-192-001	9538-192-001	9538-192-001	1
9	Pushbutton Control (coin)[Blue]	9035-062-001	9035-062-001	9035-062-001	1
9	Pushbutton Control (coin)[Black]	9035-062-002	9035-062-002	9035-062-002	1
10	Retainer Pushbutton (Micro)	9486-160-001	9486-160-001	9486-160-001	1
11	Nut Hexelasticstop #4-40	8640-424-002	8640-424-002	8640-424-002	2
12	Spacer Plastic #6x9/16	9538-157-018	9538-157-018	9538-157-018	5
13	PCB assembly Control /Display STOP	9473-010-001	9473-010-001	9473-010-001	1
14	Nut Elasticstop #6-32	8640-411-002	8640-411-002	8640-411-002	5
15	Nut-Hexkeps, #6-32	8640-411-003	8640-411-003	8640-411-003	1
16	Harness LEDPCB	9627-797-001	9627-797-001	9627-797-001	1
*	Harness Doorlock, Switches P4/P15	9627-791-003	9627-791-003	9627-791-004	1
17	Spacer Plastic #6x9/16	9538-157-018	9538-157-018	9538-157-018	2
18	PCB assembly Mode lights	9473-005-001	9473-005-001	9473-005-001	1
19	Nut Hexkeps #6-32	8640-411-003	8640-411-003	8640-411-003	2
*	Mode Light Backing Window	9635-022-001	9635-022-001	9635-022-001	1
20	Accecptor-Coin, Optical	9021-092-002	9021-092-002	9021-092-002	1
21	Retainer, Coin Accecptor	9486-149-001	9486-149-001	9486-149-001	1
22	Screws, Torx, T-10, 4Bx3/8ss	9545-053-002	9545-053-002	9545-053-002	2
23	Switch Assembly Emergency Stop (includes wire harness)	9732-223-001	9732-223-001	9732-223-001	1
24	Spacer Plastic #8x5/16 E-Stop	9538-157-020	9538-157-020	9538-157-020	2
25	Plate to mount e-stop button	9452-725-001	9452-725-001	9452-725-001	1
26	Nuts-Hexkeps, #8-32	8640-412-005	8640-412-005	8640-412-005	3
27	Plastic Shield over main PCB	9550-184-001	9550-184-001	9550-184-001	1
28	Nuts-Hexkeps, #8-32	8640-412-005	8640-412-005	8640-412-005	3
29	Nameplate,Control Panel (Blue)	9412-208-002	9412-210-002	9412-212-002	1
29	Nameplate,Control Panel (Black)	9412-208-001	9412-210-001	9412-212-001	1
*	Label Name Plate RH (Blue)	8502-744-001	N.A.	N.A.	1
*	Label Name Plate RH (Black)	8502-744-001	N.A.	N.A.	1
30	Motor Ass'y, Door Locking (see Door Lock Group for parts break-down)	9892-015-001	9892-015-001	9892-015-001	1
31	Nuts-Hexkeps, #8-32	8640-412-005	8640-412-005	8640-412-005	3
*	Battery	8612-001-001	8612-001-001	8612-001-001	1
32	Cable, USB	9806-022-001	9806-022-001	9806-022-001	1
*	USB Retainer	9486-159-001	9486-159-001	9486-159-001	*
33	Screw-Torx T10, #4-40x3/8ss	9545-053-002	9545-053-002	9545-053-002	2
34	Nut, Spring	8640-399-008	8640-399-008	8640-399-008	2

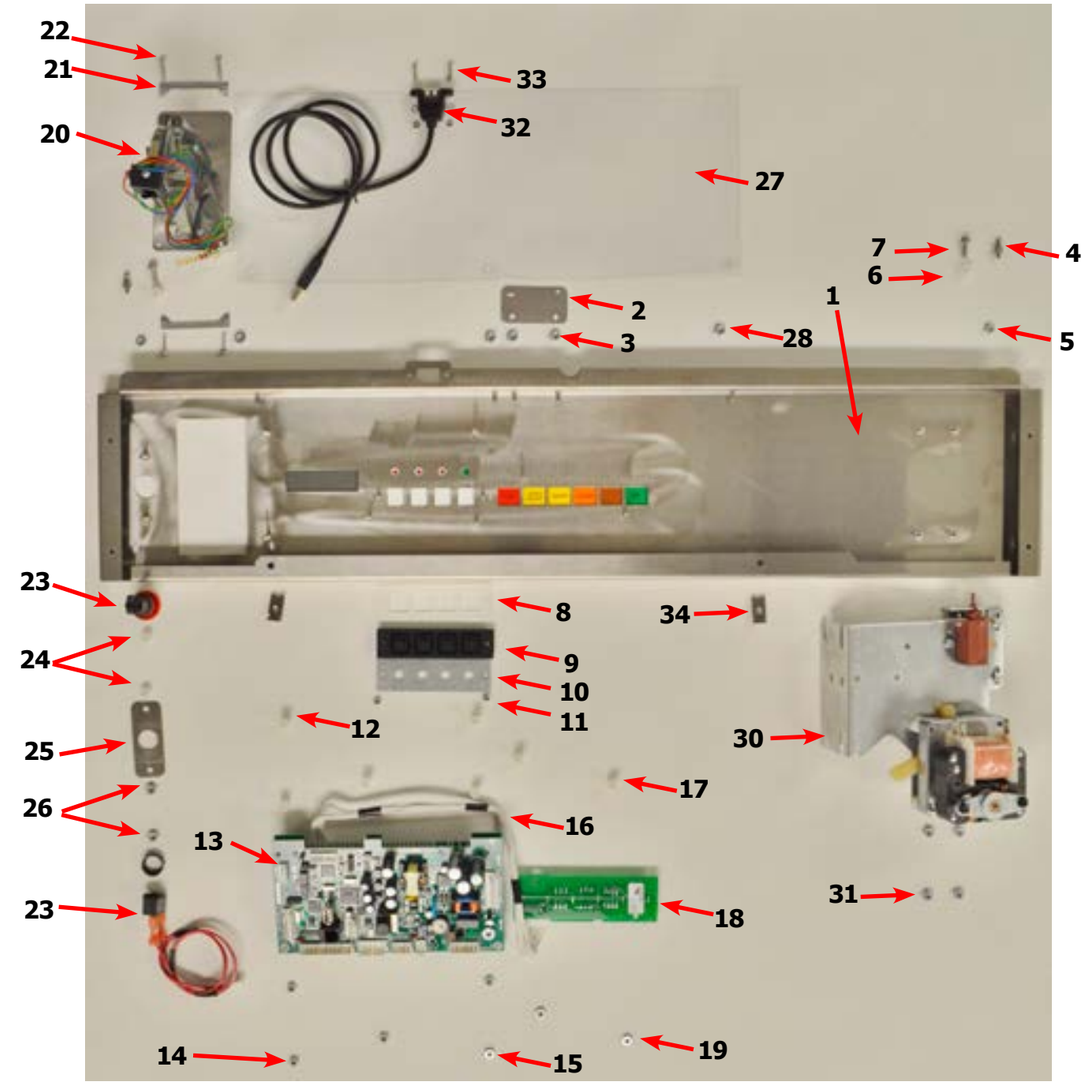

Labels and Diagrams WC0 Models

Key	Description	T300	T400	T600	QTY
*	Transient Voltage Surge Suppressor Infomational	8507-330-001	8507-330-001	8507-330-001	1
*	Label High Voltage Warning	8502-614-004	8502-614-004	8502-614-004	1
*	Label Fusing & Installation	8502-619-004	8502-619-004	8502-619-004	1
*	Label Quality	8511-001-002	8511-001-002	8511-001-002	1
1	Label, Door Opening-Blue	8502-757-002	8502-757-002	8502-757-002	1
1	Label, Door Opening-Black	8502-757-001	8502-757-001	8502-757-001	1
2	Label, Warning Risk of Injury-Blue	8502-759-002	8502-759-002	8502-759-002	1
2	Label, Warning Risk of Injury-Black	8502-759-001	8502-759-001	8502-759-001	1
1	Manual-Operators	8514-296-001	8514-296-001	8514-296-001	1

1

2

Notes

Notes

Section 9:

Coin Handling Parts:

Wiring Diagrams
& Schematics &
maintenance Procedures

Optical Coin Acceptor

Starting after serial# 515483

Key	Description	T300	T400	T600	QTY
1	Optical Coin Acceptor	9021-092-002	9021-092-002	9021-092-002	1
2	Replacement Optical Sensor	9801-099-001	9801-099-001	9801-099-001	1
*	Screw, Highth Bar, 3mm	9545-039-002	9545-039-002	9545-039-002	2

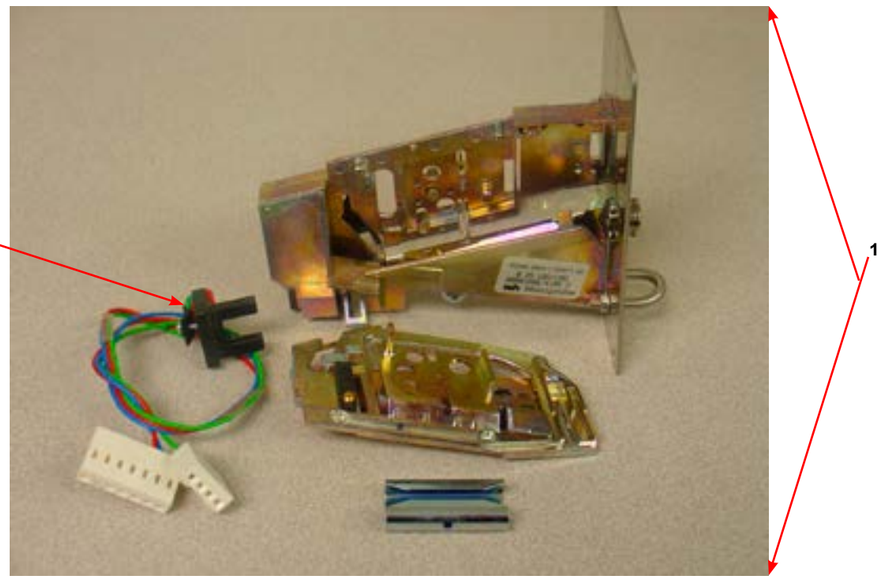

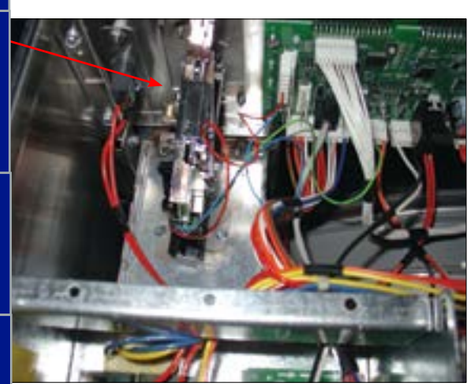

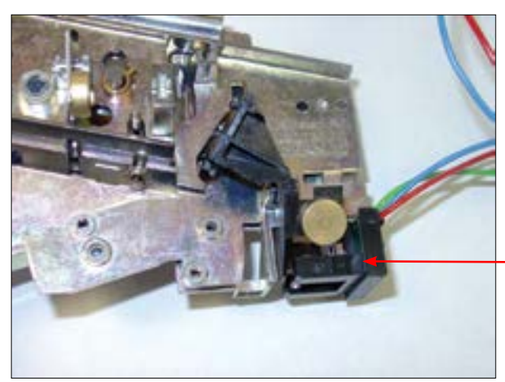

Kit - Electronic Acceptor (USA and Canada)

Key	Description	T350	T450	QTY
	KIT - Electronic Acceptor Conversion for C-Series (USA and Canada) Contact the Dexter Factory for Other Countries	9732-301-004	9732-301-004	1
1	Electronic Coin Acceptor (USA and Canada)	9021-077-001	9021-077-001	1
2	Harness for Electronic Coin Acceptor	9627-909-001	9627-909-001	1
3	Transformer 120/18VAC	8711-015-001	8711-015-001	1
*	Wire Assembly - Blue	8220-001-338	8220-001-338	1
*	Wire Assembly - Orange/White	8220-001-235	8220-001-235	1
4	Coin Chute for Electronic Drop	9119-028-001	9119-028-001	1
*	Nut - Hex Elastic Stop	8640-424-002	8640-424-002	1
*	Screw, Torx	9545-020-004	9545-020-004	4
*	Screw, Hex	9545-045-001	9545-045-001	4
*	Label, Informative	6102-017-001	6102-017-001	2
*	Label, Warning	8502-730-001	8502-730-001	1
*	Instructions, Installation	8507-466-004	8507-466-004	1
5	Coin Chute for Electronic Drop	9119-030-001	9119-030-001	1

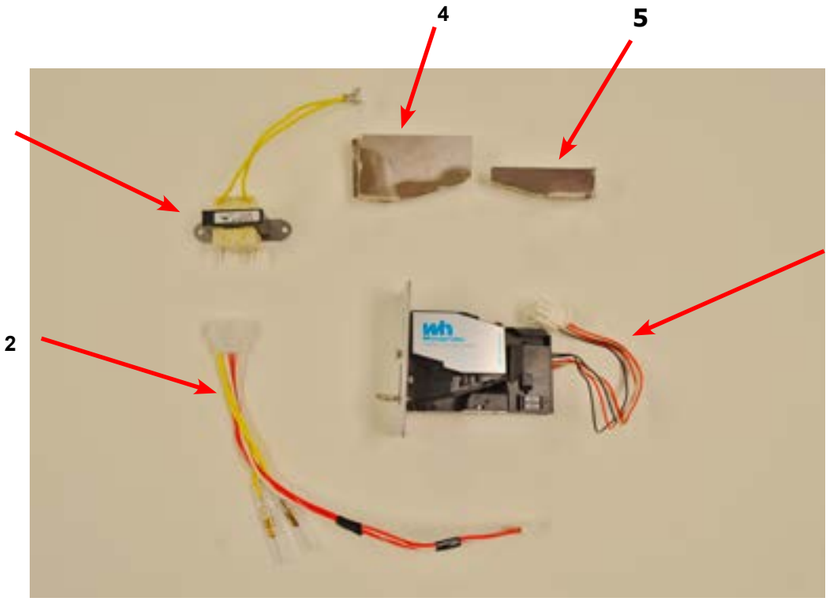

Electronic Acceptor Coin Drop

Setting the electronic coin acceptor switches

Some washer models come equipped with an electronic coin acceptor. Follow the instructions below for setting the switches for the desired country and currencies.

1. The electronic coin acceptor has switch settings depending on the coins and country. See the table below for available values of the left and right coin inputs for the available countries.

   WARNING: turn power off before and leave power off when changing the switches of the electronic coin acceptor.

2. Turn power back on and test coins to ensure proper operation.

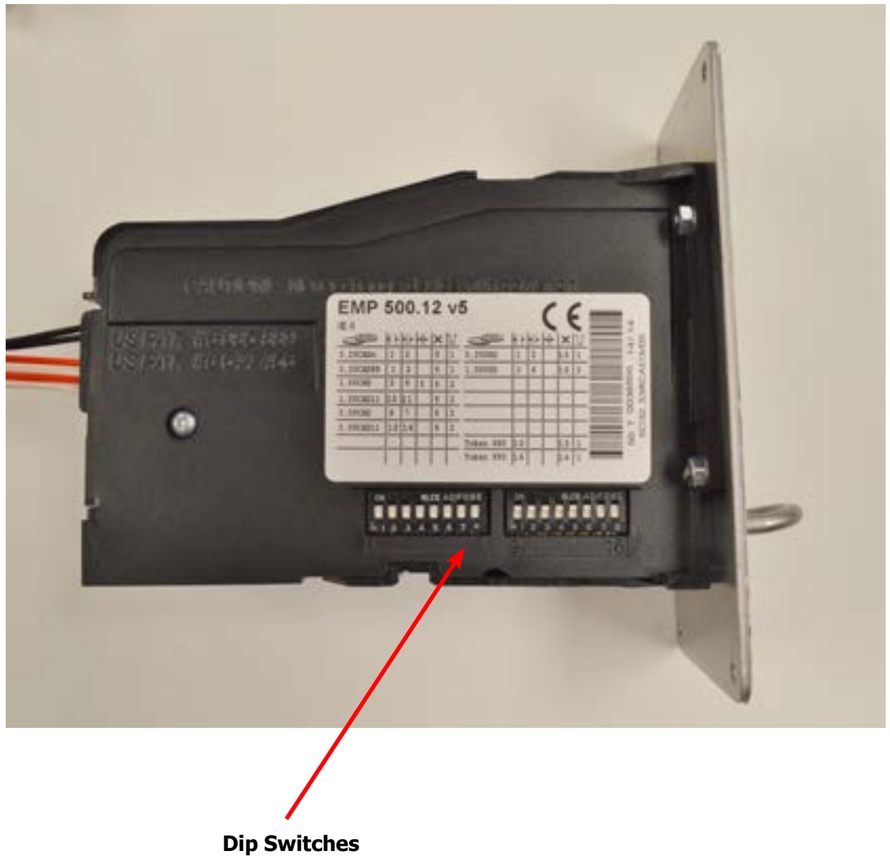

Coin Acceptor Switch Settings

■ INDICATES SWITCH POSITION

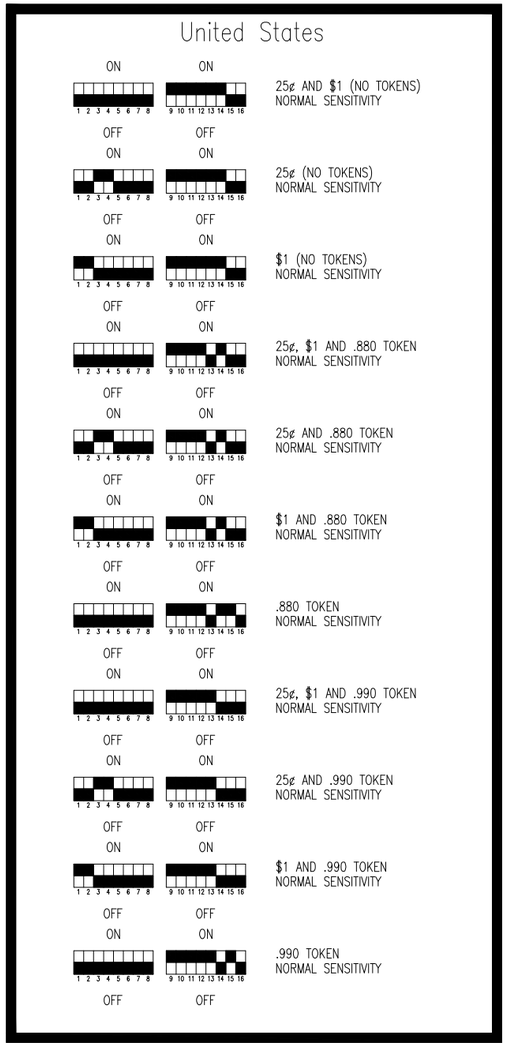

25¢ – one pulse on left washer/dryer input
$1 – one pulse on right washer/dryer input
.880 TOKEN – one pulse on left washer/dryer input
.990 TOKEN – one pulse on right washer/dryer input

Coin Acceptor Switch Settings

■ INDICATES SWITCH POSITION

Canada

ON	ON	25¢, $1(OLD & NEW), $2(OLD & NEW) (NO TOKENS) NORMAL SENSITIVITY
OFF	OFF	
ON	ON	$1(OLD & NEW) AND $2(OLD & NEW) (NO TOKENS) NORMAL SENSITIVITY
OFF	OFF	
ON	ON	25¢ AND $2(OLD & NEW) (NO TOKENS) NORMAL SENSITIVITY
OFF	OFF	
ON	ON	25¢ AND $1(OLD & NEW) (NO TOKENS) NORMAL SENSITIVITY
OFF	OFF	
ON	ON	25¢ (NO TOKENS) NORMAL SENSITIVITY
OFF	OFF	
ON	ON	$2(OLD & NEW) (NO TOKENS) NORMAL SENSITIVITY
OFF	OFF	
ON	ON	$1(OLD & NEW) (NO TOKENS) NORMAL SENSITIVITY
OFF	OFF	
ON	ON	25¢, $1(NEW ONLY), $2(NEW ONLY) (NO TOKENS) NORMAL SENSITIVITY
OFF	OFF	
ON	ON	$1(NEW ONLY) AND $2(NEW ONLY) (NO TOKENS) NORMAL SENSITIVITY
OFF	OFF	
ON	ON	25¢ AND $2(NEW ONLY) (NO TOKENS) NORMAL SENSITIVITY
OFF	OFF	
ON	ON	25¢ AND $1(NEW ONLY) (NO TOKENS) NORMAL SENSITIVITY
OFF	OFF	
ON	ON	$2(NEW ONLY) (NO TOKENS) NORMAL SENSITIVITY
OFF	OFF	
ON	ON	$1(NEW ONLY) (NO TOKENS) NORMAL SENSITIVITY
OFF	OFF	

Canada

ON	ON	25¢, $1(OLD & NEW), $2(OLD & NEW) AND .880 TOKEN NORMAL SENSITIVITY
OFF	OFF	
ON	ON	$1(OLD & NEW), $2(OLD & NEW) AND .880 TOKEN NORMAL SENSITIVITY
OFF	OFF	
ON	ON	25¢, $2(OLD & NEW) AND .880 TOKEN NORMAL SENSITIVITY
OFF	OFF	
ON	ON	25¢, $1(OLD & NEW) AND .880 TOKEN NORMAL SENSITIVITY
OFF	OFF	
ON	ON	25¢ AND .880 TOKEN NORMAL SENSITIVITY
OFF	OFF	
ON	ON	$2(OLD & NEW) AND .880 TOKEN NORMAL SENSITIVITY
OFF	OFF	
ON	ON	$1(OLD & NEW) AND .880 TOKEN NORMAL SENSITIVITY
OFF	OFF	
ON	ON	25¢, $1(NEW ONLY), $2(NEW ONLY) AND .880 TOKEN NORMAL SENSITIVITY
OFF	OFF	
ON	ON	$1(NEW ONLY), $2(NEW ONLY) AND .880 TOKEN NORMAL SENSITIVITY
OFF	OFF	
ON	ON	25¢, $2(NEW ONLY) AND .880 TOKEN NORMAL SENSITIVITY
OFF	OFF	
ON	ON	25¢, $1(NEW ONLY) AND .880 TOKEN NORMAL SENSITIVITY
OFF	OFF	
ON	ON	$2(NEW ONLY) AND .880 TOKEN NORMAL SENSITIVITY
OFF	OFF	
ON	ON	$1(NEW ONLY) AND .880 TOKEN NORMAL SENSITIVITY
OFF	OFF	

25¢ – one pulse on left washer/dryer input
$1 – one pulse on right washer/dryer input
$2 – two pulses on right washer/dryer input
.880 TOKEN – one pulse on right washer/dryer input
.990 TOKEN – one pulse on right washer/dryer input

Coin Acceptor Switch Settings

■ INDICATES SWITCH POSITION

Canada

ON	ON	25¢, $1(OLD & NEW), $2(OLD & NEW) AND .990 TOKEN NORMAL SENSITIVITY
OFF	OFF	
ON	ON	$1(OLD & NEW), $2(OLD & NEW) AND .990 TOKEN NORMAL SENSITIVITY
OFF	OFF	
ON	ON	25¢, $2(OLD & NEW) AND .990 TOKEN NORMAL SENSITIVITY
OFF	OFF	
ON	ON	25¢, $1(OLD & NEW) AND .990 TOKEN NORMAL SENSITIVITY
OFF	OFF	
ON	ON	25¢ AND .990 TOKEN NORMAL SENSITIVITY
OFF	OFF	
ON	ON	$2(OLD & NEW) AND .990 TOKEN NORMAL SENSITIVITY
OFF	OFF	
ON	ON	$1(OLD & NEW) AND .990 TOKEN NORMAL SENSITIVITY
OFF	OFF	
ON	ON	25¢, $1(NEW ONLY), $2(NEW ONLY) AND .990 TOKEN NORMAL SENSITIVITY
OFF	OFF	
ON	ON	$1(NEW ONLY), $2(NEW ONLY) AND .990 TOKEN NORMAL SENSITIVITY
OFF	OFF	
ON	ON	25¢, $2(NEW ONLY) AND .990 TOKEN NORMAL SENSITIVITY
OFF	OFF	
ON	ON	25¢, $1(NEW ONLY) AND .990 TOKEN NORMAL SENSITIVITY
OFF	OFF	
ON	ON	$2(NEW ONLY) AND .990 TOKEN NORMAL SENSITIVITY
OFF	OFF	
ON	ON	$1(NEW ONLY) AND .990 TOKEN NORMAL SENSITIVITY
OFF	OFF	

Canada

ON	ON	25¢, $1(OLD & NEW), $2(OLD & NEW), .880 and .990 TOKEN NORMAL SENSITIVITY
OFF	OFF	
ON	ON	$1(OLD & NEW), $2(OLD & NEW), .880 AND .990 TOKEN NORMAL SENSITIVITY
OFF	OFF	
ON	ON	25¢, $2(OLD & NEW), .880 AND .990 TOKEN NORMAL SENSITIVITY
OFF	OFF	
ON	ON	25¢, $1(OLD & NEW), .880 AND .990 TOKEN NORMAL SENSITIVITY
OFF	OFF	
ON	ON	25¢, .880 AND .990 TOKEN NORMAL SENSITIVITY
OFF	OFF	
ON	ON	$2(OLD & NEW), .880 AND .990 TOKEN NORMAL SENSITIVITY
OFF	OFF	
ON	ON	$1(OLD & NEW), .880 AND .990 TOKEN NORMAL SENSITIVITY
OFF	OFF	
ON	ON	25¢, $1(NEW ONLY), $2(NEW ONLY), .880 AND .990 TOKEN NORMAL SENSITIVITY
OFF	OFF	
ON	ON	$1(NEW ONLY), $2(NEW ONLY), .880 AND .990 TOKEN NORMAL SENSITIVITY
OFF	OFF	
ON	ON	25¢, $2(NEW ONLY), .880 AND .990 TOKEN NORMAL SENSITIVITY
OFF	OFF	
ON	ON	25¢, $1(NEW ONLY), .880 AND .990 TOKEN NORMAL SENSITIVITY
OFF	OFF	
ON	ON	$2(NEW ONLY), .880 AND .990 TOKEN NORMAL SENSITIVITY
OFF	OFF	
ON	ON	$1(NEW ONLY), .880 AND .990 TOKEN NORMAL SENSITIVITY
OFF	OFF	

25¢ – one pulse on left washer/dryer input
$1 – one pulse on right washer/dryer input
$2 – two pulses on right washer/dryer input
.880 TOKEN – one pulse on right washer/dryer input
.990 TOKEN – one pulse on right washer/dryer input

Maintenance Instructions

Electronic Acceptor

Cleaning the electronic coin selector

The EMP 500 v5 is an extraordinarily robust coin selector and operates relatively maintenance free. However, it should be cleaned at regular intervals (minimum once a year) especially if it is operating in an environment with high levels of dust, smoke or nicotine. The cleaning intervals are of course dependent on the level of air borne contaminants.

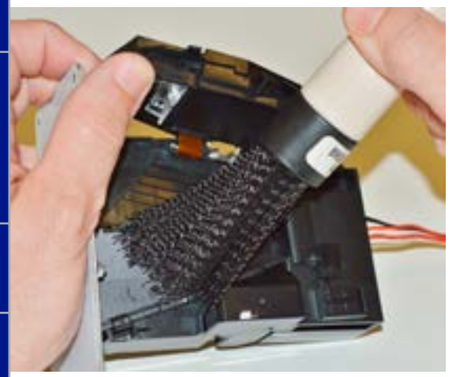

Clean the coin path with soft brush and wipe the exposed surfaces. Use an alcohol moistened cloth. If you find solid residues stuck to the coin rail remove it with an alcohol moistened cloth.

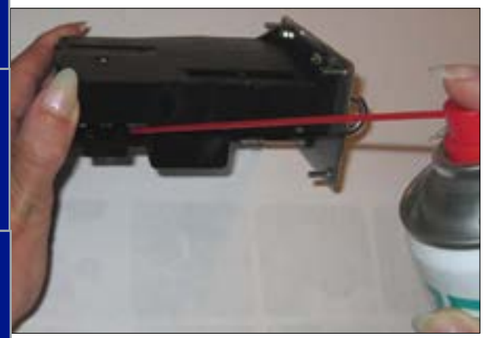

Optical sensors may be cleaned with a soft brush very carefully with an air spray duster.

Location of the optical sensor within coin outlet.

Notes

T-300: Vended 120 Volt Wiring Schematic

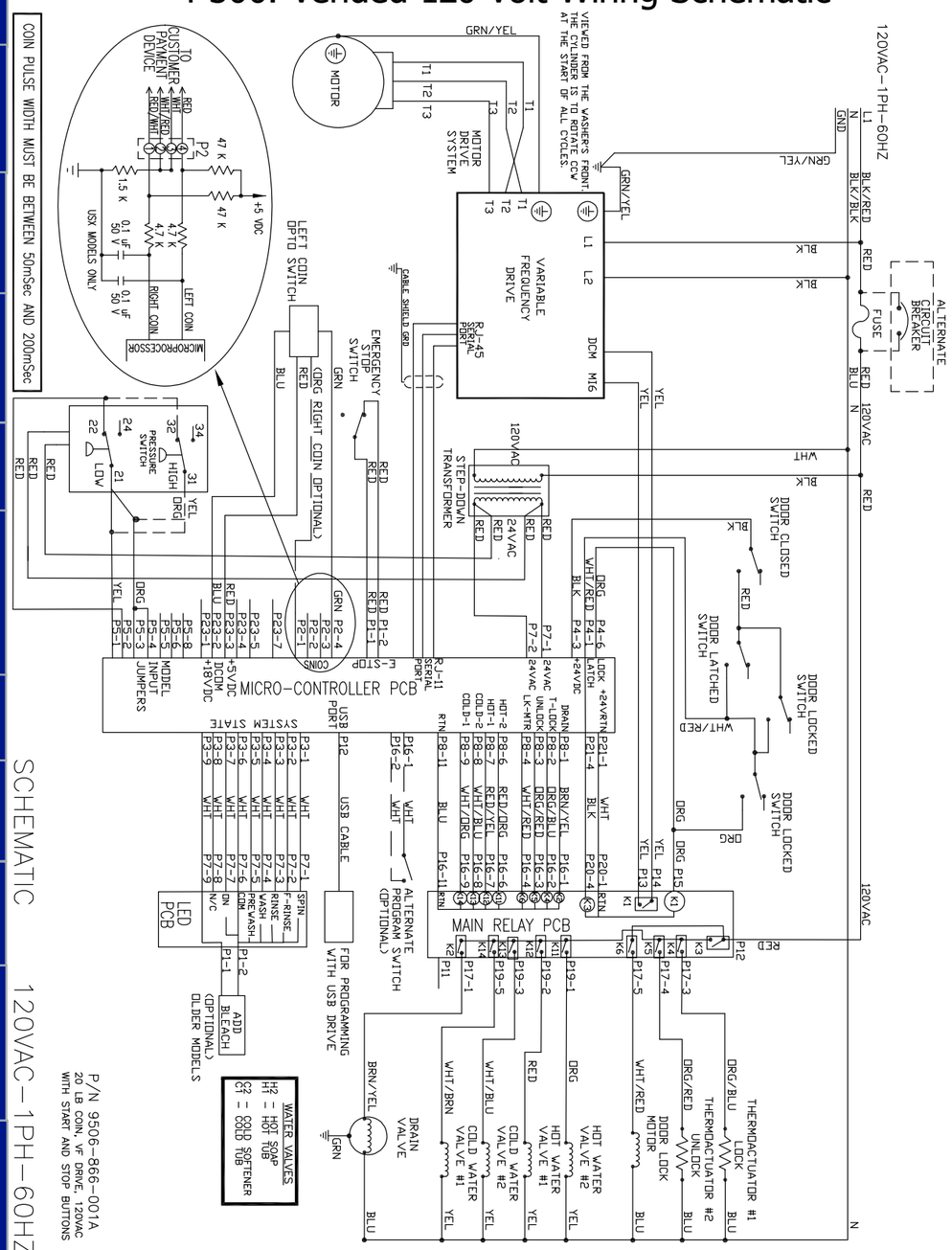

SCHEMATIC 120VAC-1PH-60HZ

T-300: Vended 120 Volt Wiring Diagram

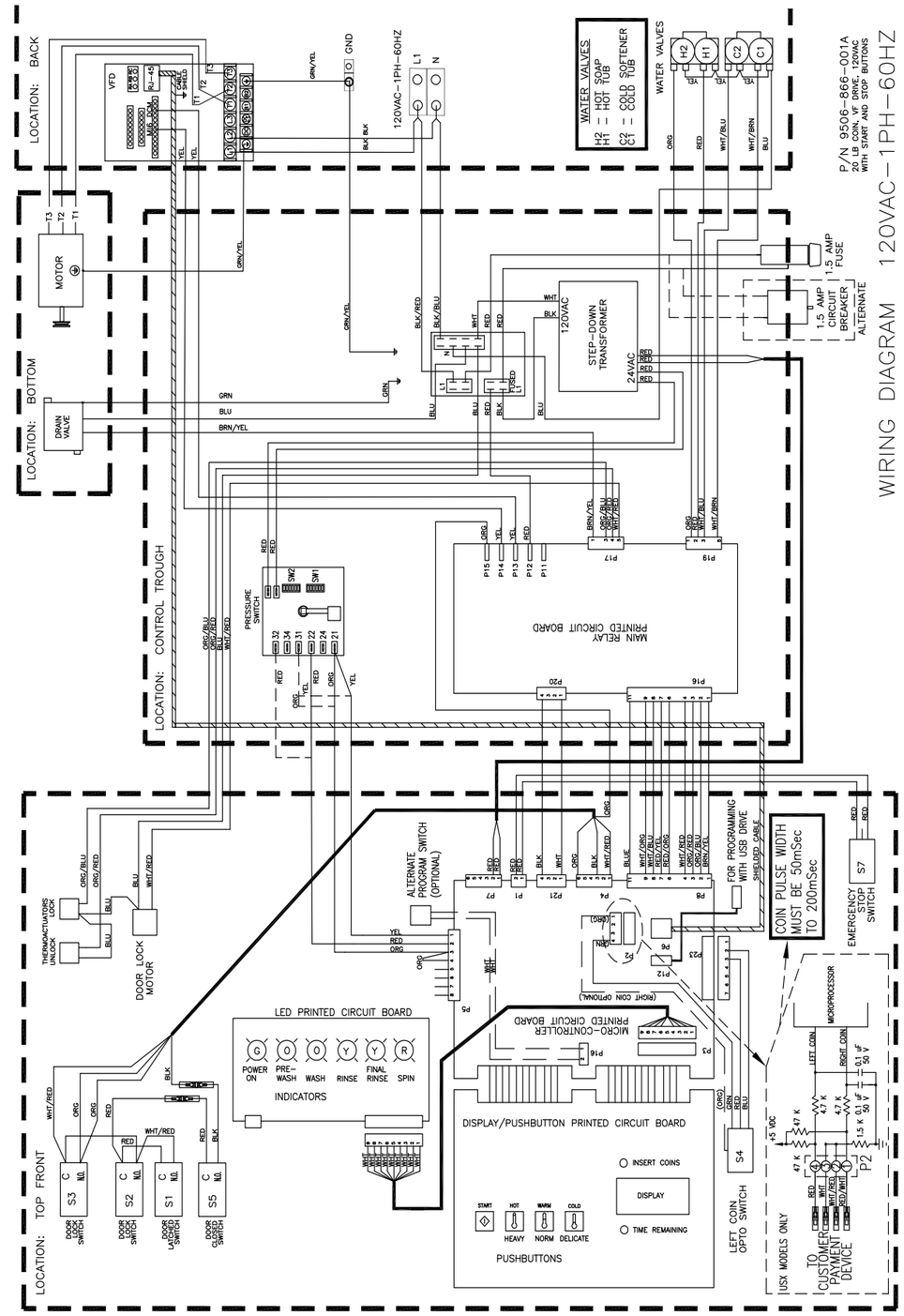

T-300: 208-240V Schematic

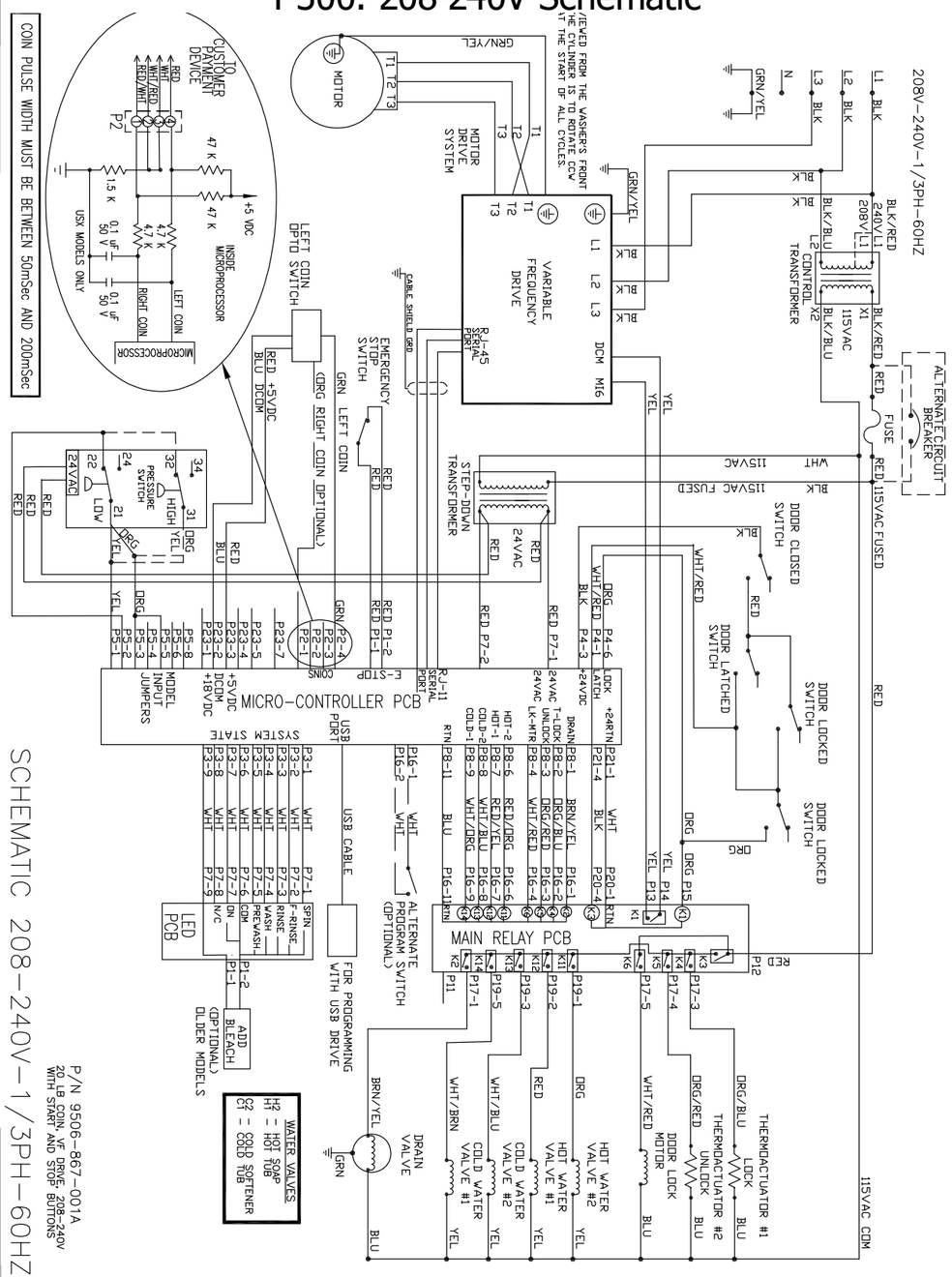

SCHEMATIC 208-240V-1/3PH-60HZ

P/N 9506-867-001A
20 LB COIN, VF DRIVE, 208-240V
WITH START AND STOP BUTTONS

T-300: 208-240V Diagram

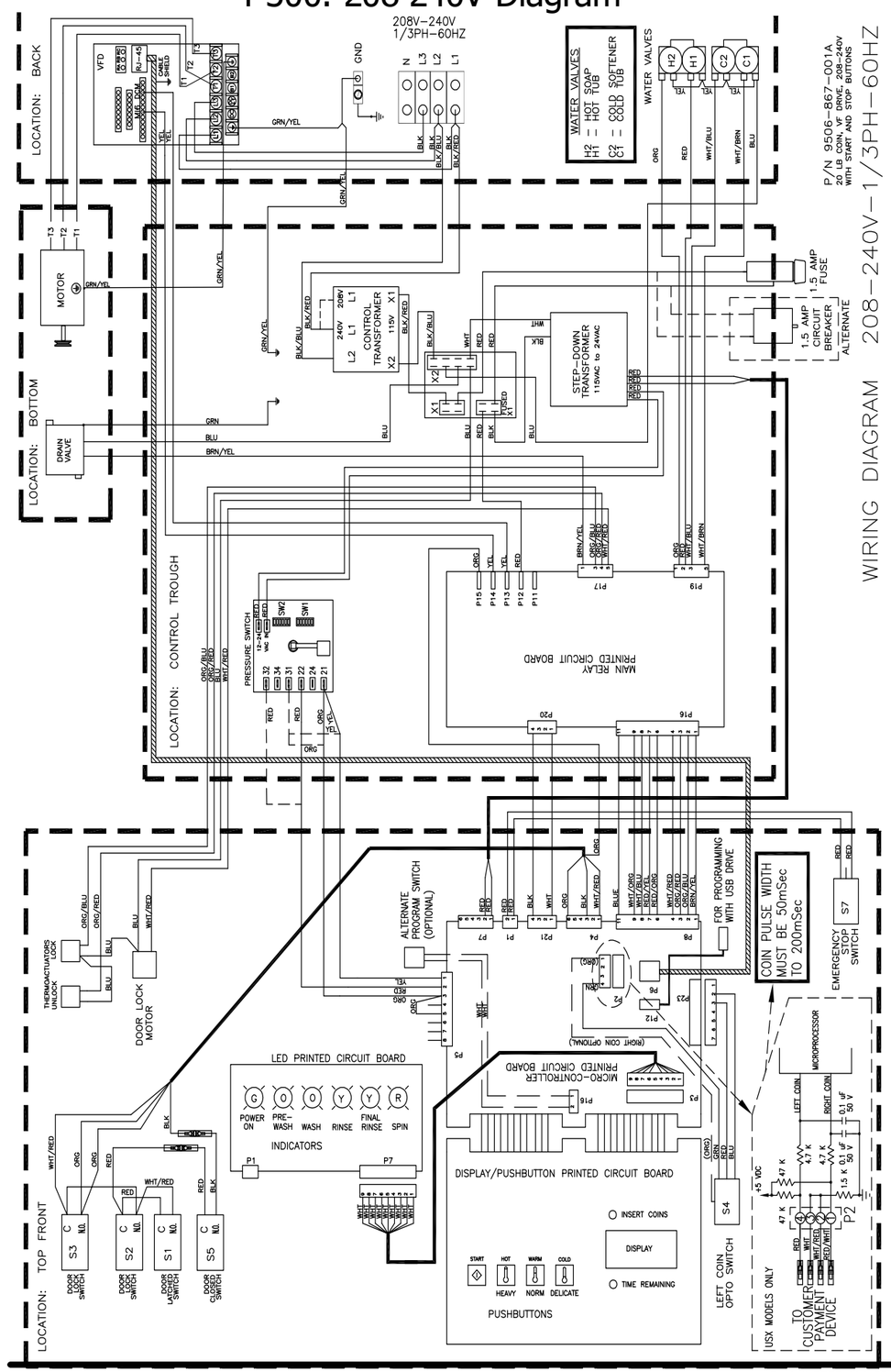

P/N 9506-867-001A
20 LB COIN, VF DRIVE, 208-240V
WITH START AND STOP BUTTONS

WIRING DIAGRAM 208-240V-1/3PH-60HZ

T-400: 208-240V Schematic

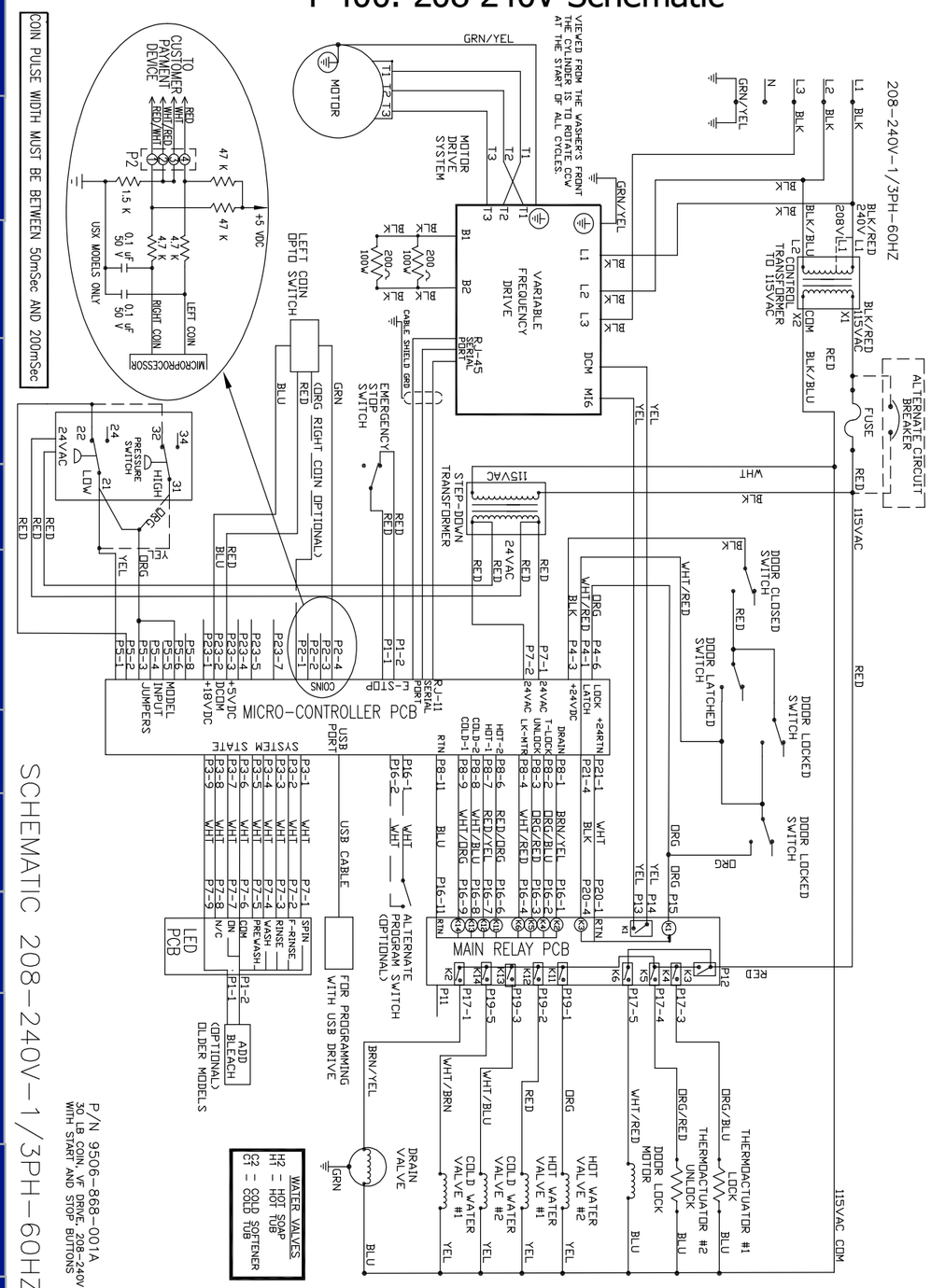

SCHEMATIC 208-240V-1/3PH-60HZ

P/N 9506-868-001A
30 LB. COIN, VF DRIVE, 208-240V
WITH START AND STOP BUTTONS

T-400: 208-240V Wiring

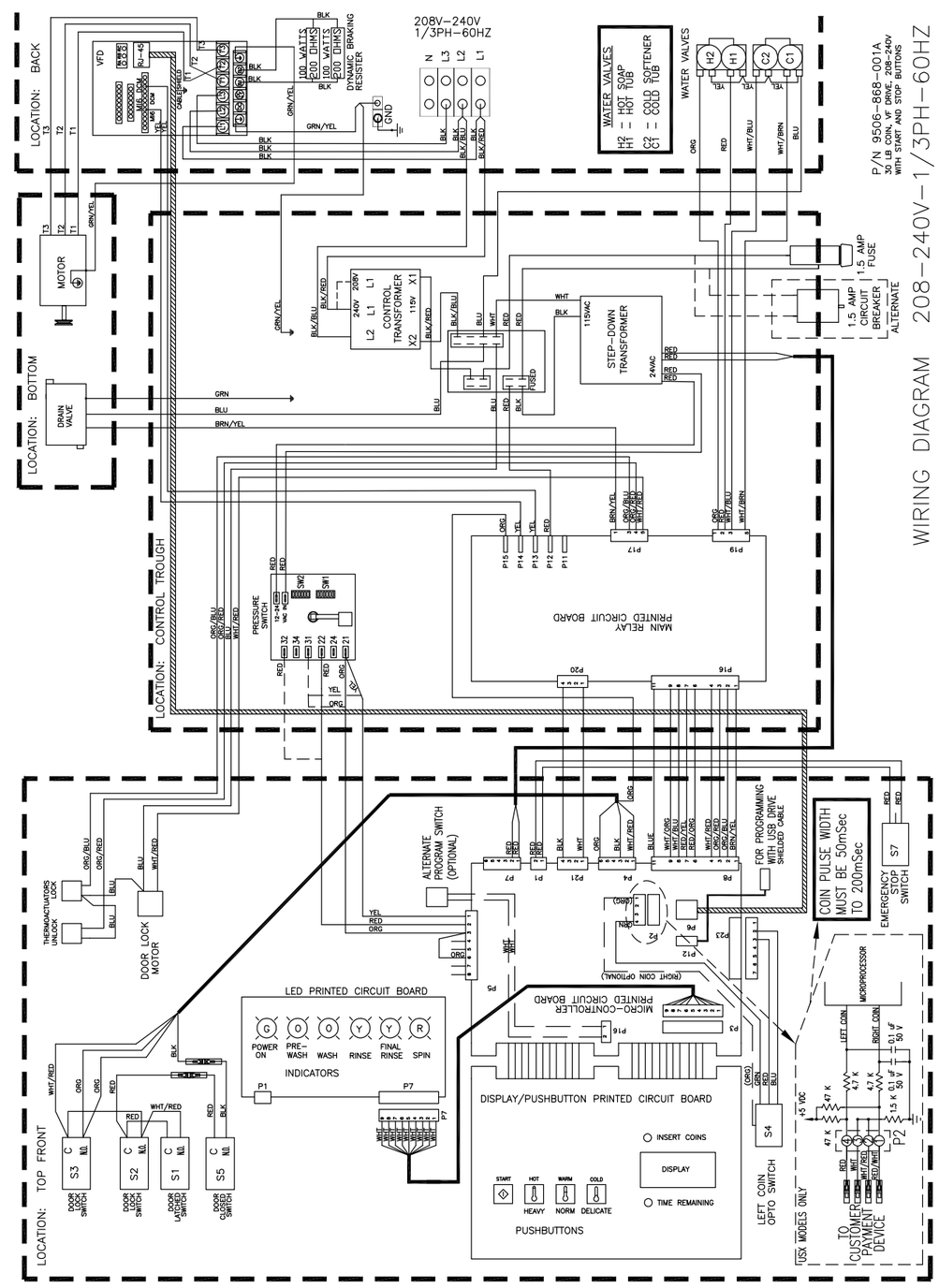

P/N 9506-868-001A
30 LB. COIN, VF DRIVE, 208-240V
WITH START AND STOP BUTTONS

WIRING DIAGRAM 208-240V-1/3PH-60HZ

T-600: 208-240V Schematic

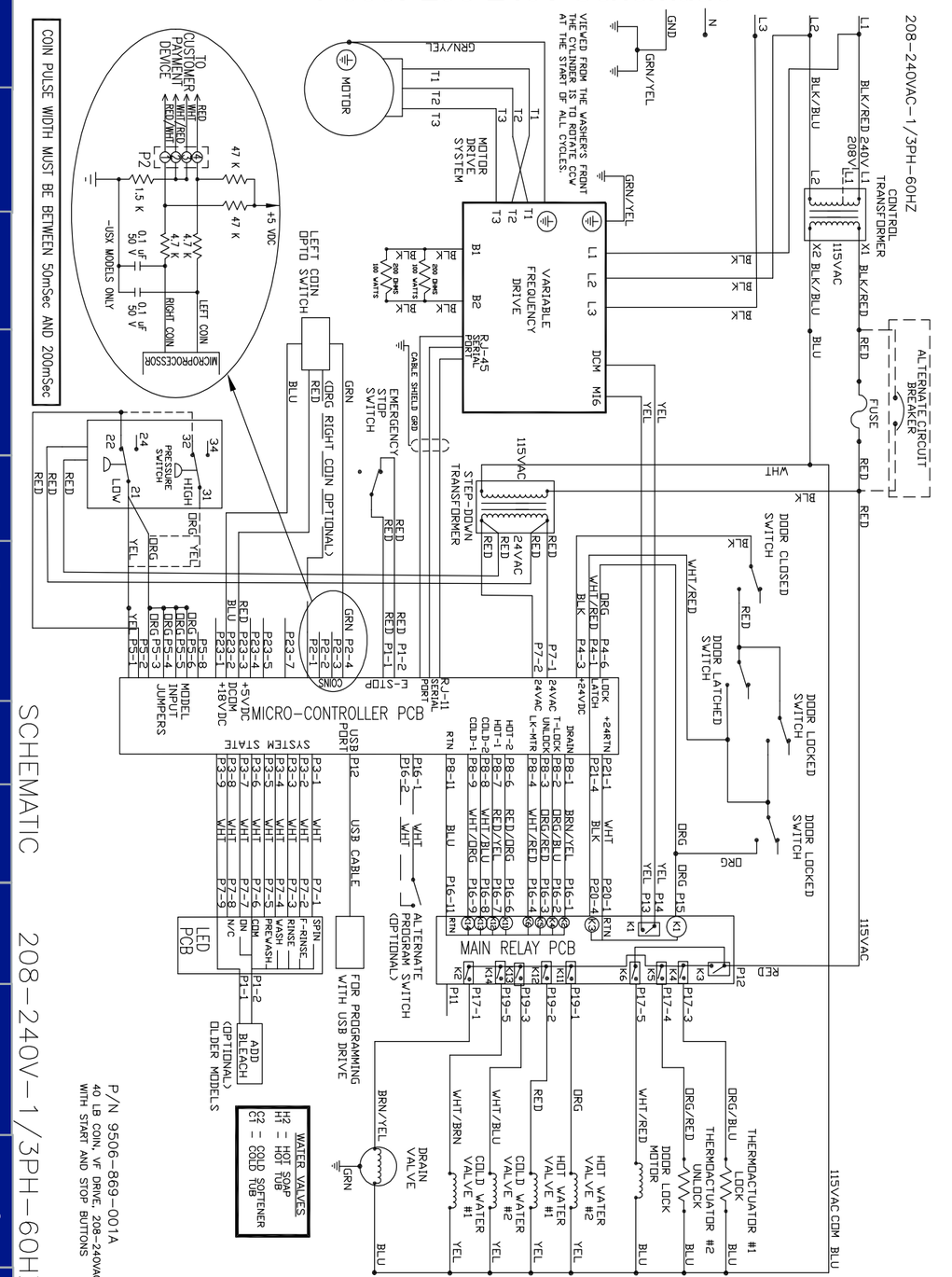

SCHEMATIC 208-240V-1/3PH-60HZ

P/N 9506-869-001A
40 LB COIN, VF DRIVE, 208-240VAC
WITH START AND STOP BUTTONS

T-600: 208-240V Wiring

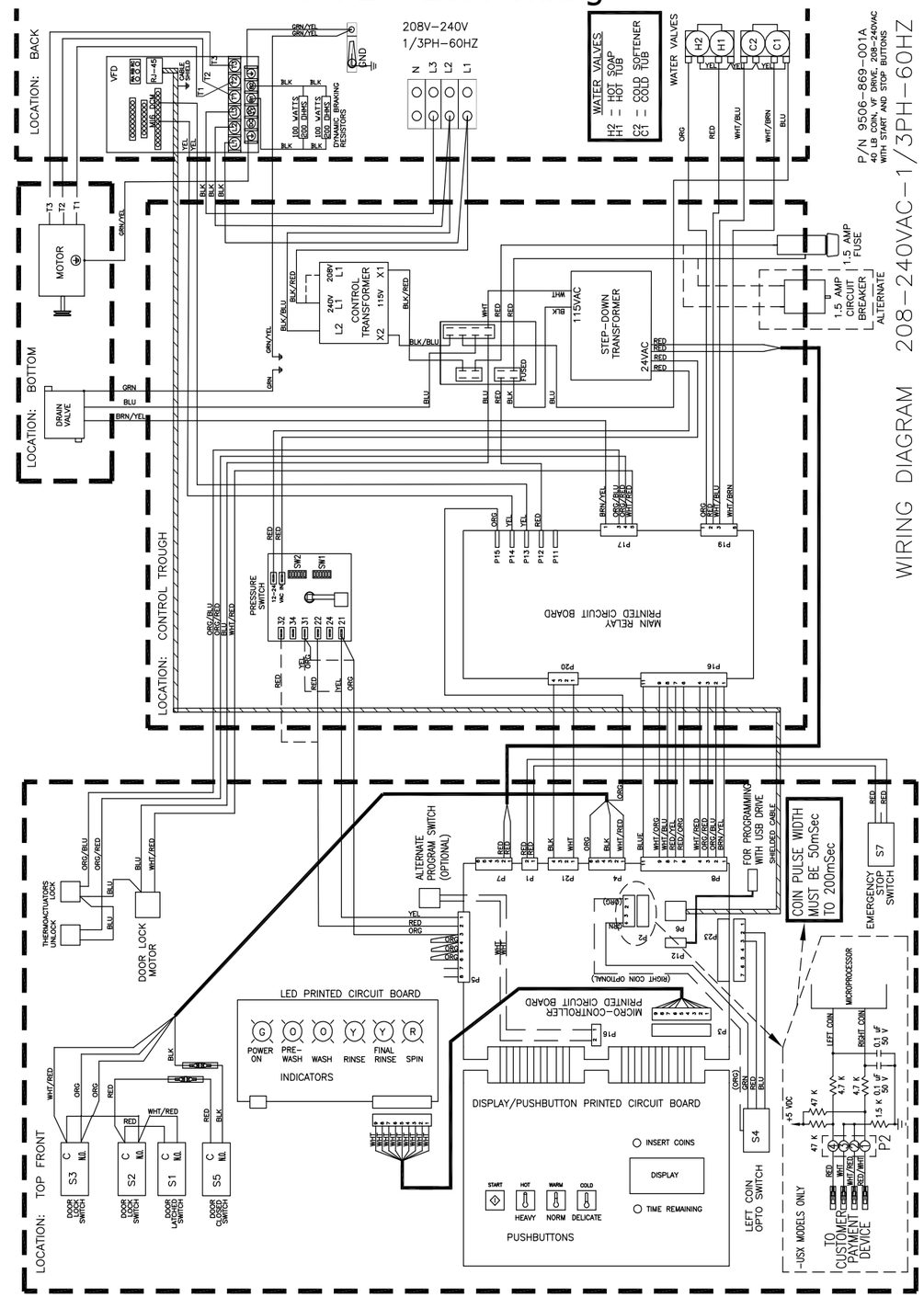

WIRING DIAGRAM 208-240VAC-1/3PH-60HZ

P/N 9506-869-001A
40 LB COIN, VF DRIVE, 208-240VAC
WITH START AND STOP BUTTONS

Notes

Section 10:

Parts 50Hz

Models:

Parts in this section used only in these models. All other parts are same as standard 60 Hz pages.
Wiring Diagrams & Schematics

Key	Description	T300	T400	T600	QTY
1	Circuit Breaker	5198-211-002	5198-211-002	5198-211-002	1
2	Transformer 200/250V-24V	8711-004-004	8711-004-004	8711-004-004	1
*	Hose Inlit	9990-027-015	9990-027-015	9990-027-015	2
*	Harness, Power Terminal Block	9627-747-006	9627-747-006	9627-747-006	1
*	Harness Main, V1.5	9627-914-001	9627-914-001	9627-914-001	1
*	Harness, Coin Accecptorless	9627-895-001	9627-895-001	9627-895-001	1
*	EMI Filter (CE -59)	9183-053-001	9183-053-001	9183-053-001	1
*	Reactor (CE, -59)	9477-006-001	9477-006-001	9477-006-001	1
*	Wiring Label , Schematic & Diagram (Before Serial #)	9506-882-001	9506-882-001	9506-882-001	1
*	Owners Booklet (Before Serial #)	8514-296-001	8514-296-001	8514-296-001	1
*	Wiring Schematic/Diagram Label (After Serial #)	9506-938-001	9506-940-001	9506-942-001	1
*	Operators Manual (After serial #)	8514-300-001	8514-300-001	8514-300-001	1

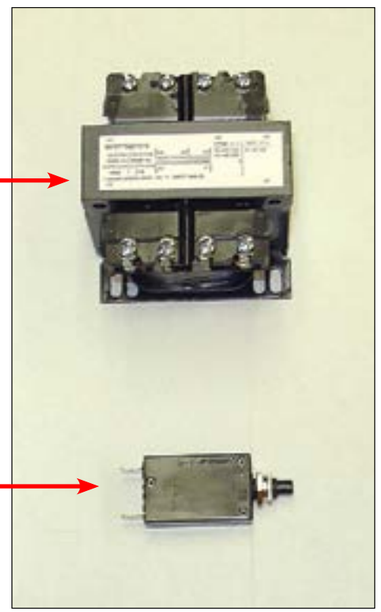

Water Valve Assy # by Model 50Hz.

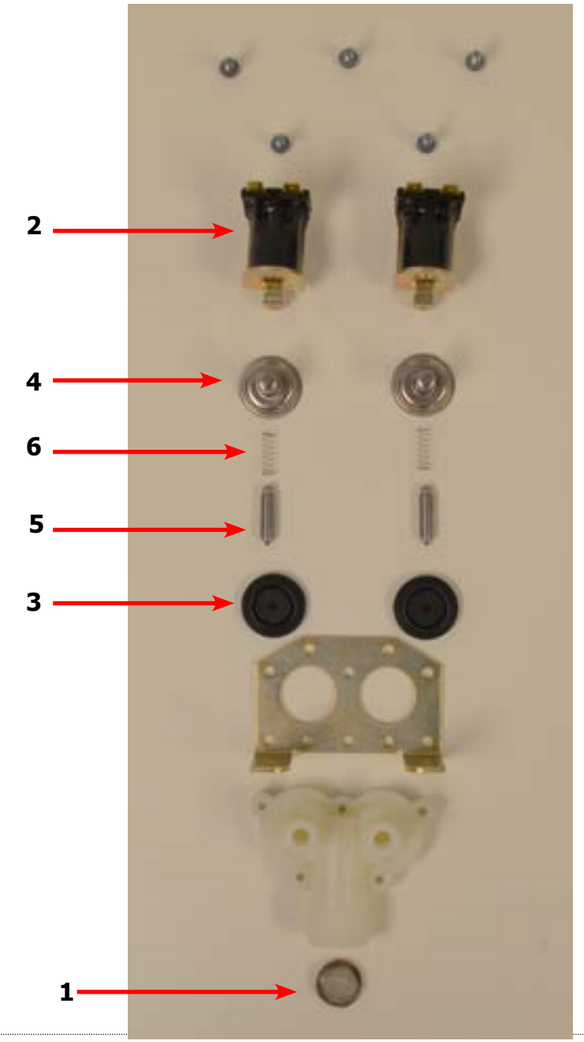

Key	Description	T300	T400	T600	QTY
*	Valve, Water Inlet (includes 1 thru 6)	9379-183-013	9379-183-013	9379-183-013	2
1	Screen, Inlet end of valve	9555-056-001	9555-056-001	9555-056-001	2
2	Coil Assy., 24V Invensys	9089-017-004	9089-017-004	9089-017-004	2
3	Diaphragm Invensys (Viton)	9118-049-002	9118-049-002	9118-049-002	2
3	Diaphragm Invensys (EPDM)	9118-049-001	9118-049-001	9118-049-001	2
4	Guide, Solenoid Invensys	9211-021-002	9211-021-002	9211-021-002	2
5	Armature Invensys	9015-008-001	9015-008-001	9015-008-001	2
6	Spring, Armature Invensys	9534-298-001	9534-298-001	9534-298-001	2

Drain Valve Group Part # by Model 50Hz.

Key	Description	T300	T400	T600	QTY
1	Valve, Drain (includes #2 thru #11)	9379-199-002	9379-202-002	9379-202-002	1
2	Body, Valve (w/ball)	9064-068-002	9064-072-001	9064-072-001	1
3	Motor & Gear Train (complete)	9914-137-020	9914-137-023	9914-137-023	1
4	Plate, Motor Mtg	9452-538-001	9452-538-001	9452-538-001	1
5	Screw	8639-994-001	8639-994-001	8639-994-001	3
6	Spring, Drive	9534-340-001	9534-339-001	9534-339-001	1
7	Screw	9545-054-001	9545-054-001	9545-054-001	2
8	Screw	9545-054-002	9545-054-002	9545-054-002	1
9	Seal, V Packer	9532-134-001	9532-134-001	9532-134-001	2
10	Washer	8641-584-001	8641-584-001	8641-584-001	1
11	Pin, Main Drive	9451-196-001	9451-196-001	9451-196-001	1
*	Plate (spacers needed for replacement motor mtg. plate)	9538-149-001	9538-149-001	9538-149-001	4
12	Kit - Seal Replacement	9732-327-001	9732-327-001	9732-327-001	1

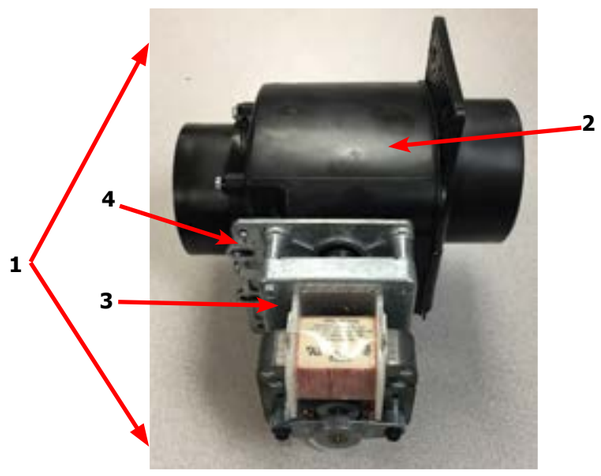

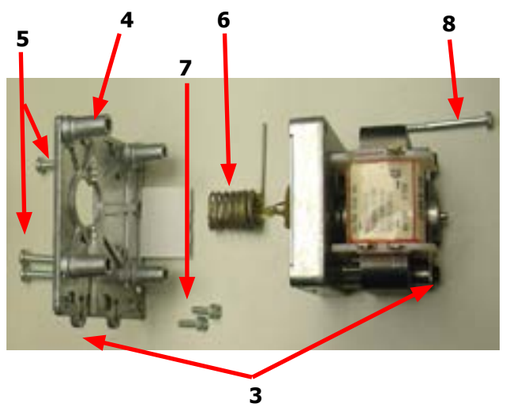

Door Lock Motor Assy # by Model 50Hz.

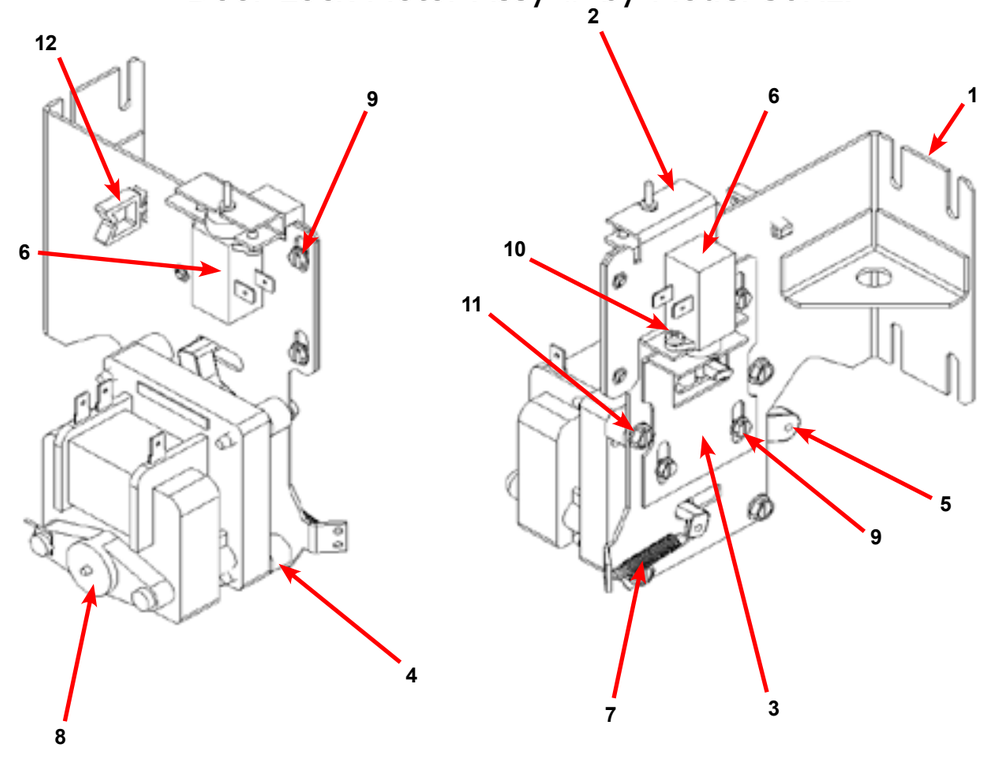

Key	Description	T300	T400	T600	QTY
*	Actuator Assembly (Includes 1-10, Rod NOT included)	9892-015-002	9892-015-002	9892-015-002	1
1	Bracket Assy, Slide Lock Actuator	9985-190-001	9985-190-001	9985-190-001	1
2	Bracket Assy, Slide - Unlock	9985-189-001	9985-189-001	9985-189-001	1
3	Bracket Slide Lock	9029-204-001	9029-204-001	9029-204-001	1
4	Spacer, Plastic	9538-157-021	9538-157-021	9538-157-021	4
5	Arm - Door Lock	9001-063-001	9001-063-001	9001-063-001	1
6	Thermoactuator - Door Lock Relay 24V	9586-001-003	9586-001-003	9586-001-003	2
7	Spring - Extension	9534-350-001	9534-350-001	9534-350-001	1
8	Motor & Gear Assembly 24V	9914-137-014	9914-137-014	9914-137-014	1
9	Screw -Hxwshrhdslsems, 6-32 x 3/16	9545-044-003	9545-044-003	9545-044-003	6
10	Cross Recessed PAn Hd Tapping screw	9545-031-011	9545-031-011	9545-031-011	4
11	Screw Pnhdcr, 10-32 UNFx0 .75	9545-012-029	9545-012-029	9545-012-029	4
12	Standoff-Wire Saddle	9527-007-001	9527-007-001	9527-007-001	1
*	Rod, Door Lock	9497-225-011	9497-225-012	9497-225-010	1
*	Harness, Door Lock/Drain, P17	9627-796-001	9627-796-001	9627-796-001	1

CE Labels and Diagrams (-59) After Serial

Key	Description	T300	T400	T600	QTY
*	Do Not Enter/Confined Space Warning Label	8502-748-001	8502-748-001	8502-748-001	1
*	Do Not Operate w/ Gear Label	8502-748-003	8502-748-003	8502-748-003	2
*	Do Not Operate w/out Gear Label	8502-748-004	8502-748-004	8502-748-004	2
*	Elec. Shock Warning Label	8502-748-005	8502-748-005	8502-748-005	2
*	Explosive Material Warning Label	8502-748-006	8502-748-006	8502-748-006	1
*	Flammable Material Warning Label	8502-748-007	8502-748-007	8502-748-007	1
*	Lockout Warning Label	8502-748-008	8502-748-008	8502-748-008	1
*	Read Manual Warning Label	8502-748-009	8502-748-009	8502-748-009	2
*	Emergency Stop Label	8502-765-001	8502-765-001	8502-765-001	
*	Wiring Schematic/Diagram Label	9506-938-001	9506-938-001	9506-938-001	1
*	Operators Manual	8514-300-001	8514-300-001	8514-300-001	1

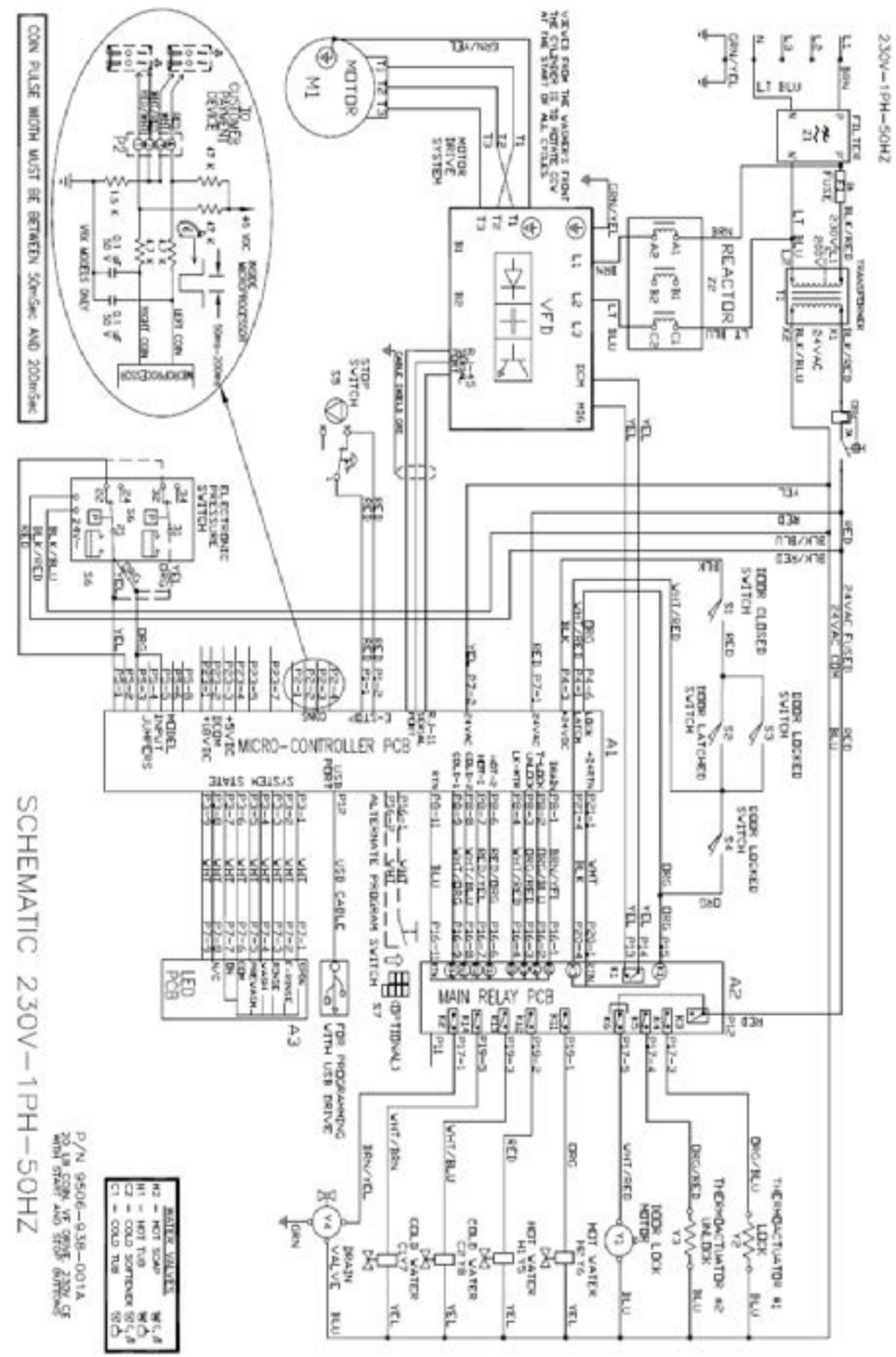

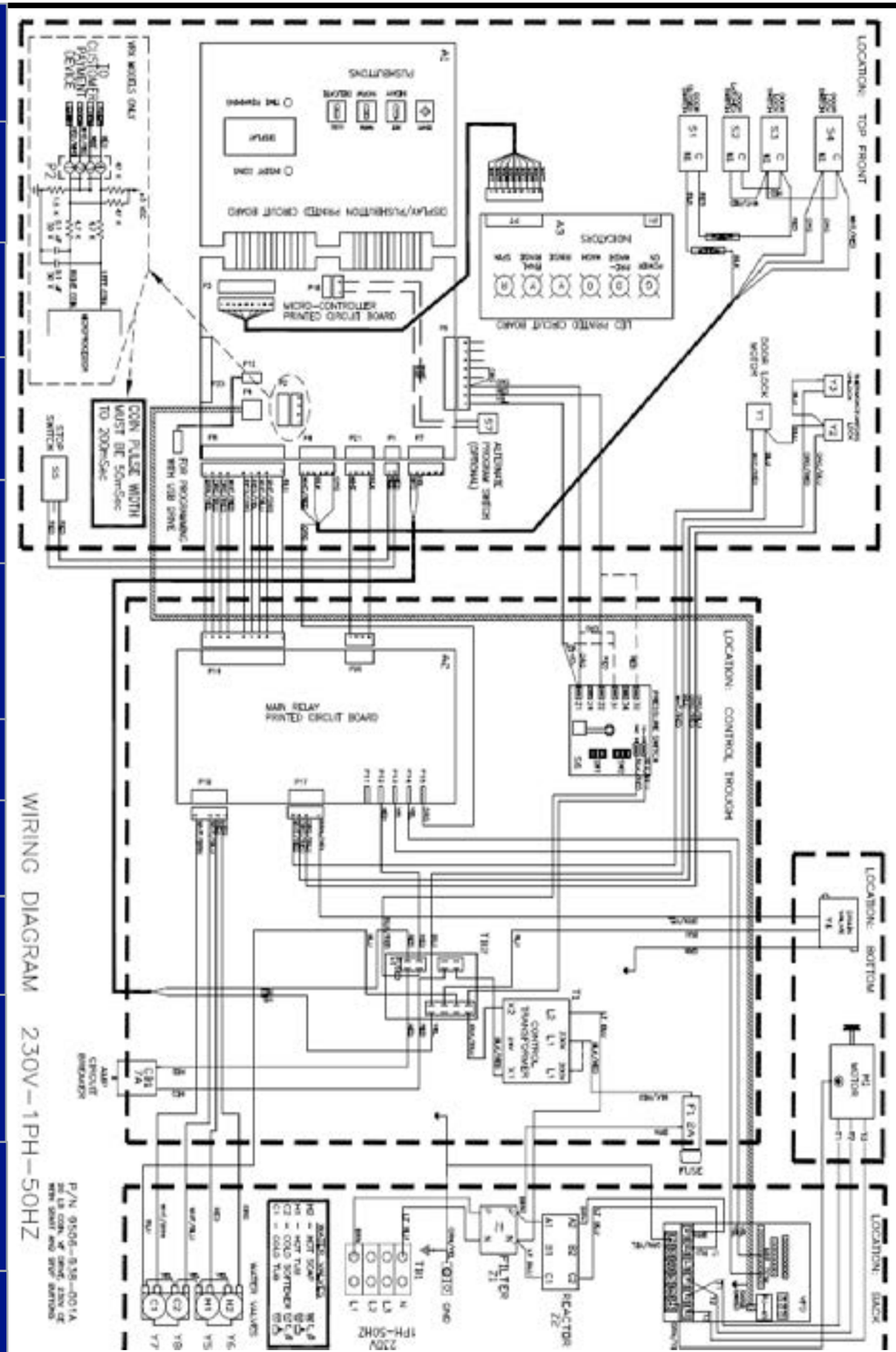

WIRING DIAGRAM 230V-1PH-50HZ

Notes

T-300: Vended 230/50/1 Voltage Diagram

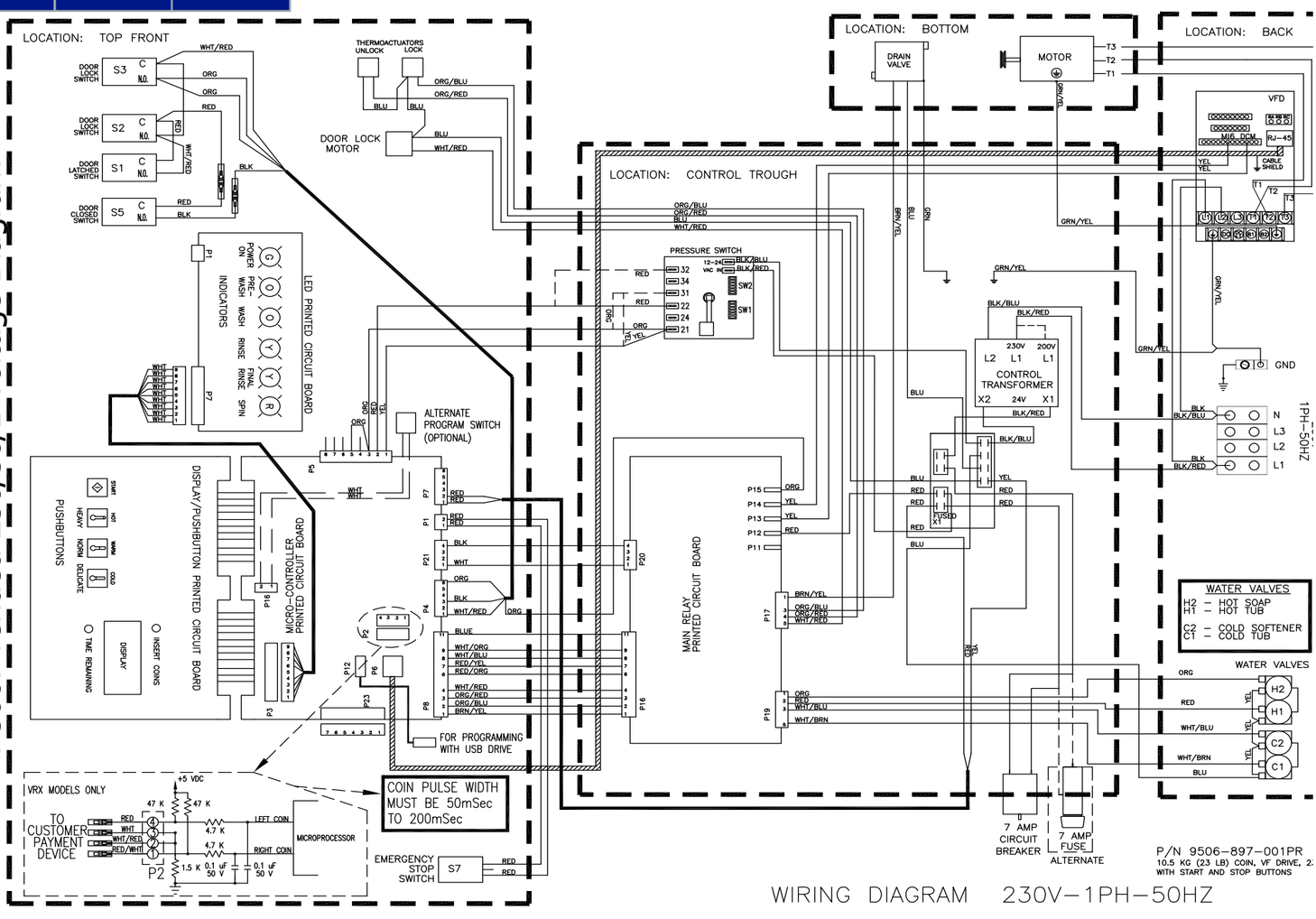

WIRING DIAGRAM 230V–1PH–50HZ

T-300: Vended 230/50/1 Voltage Schematic

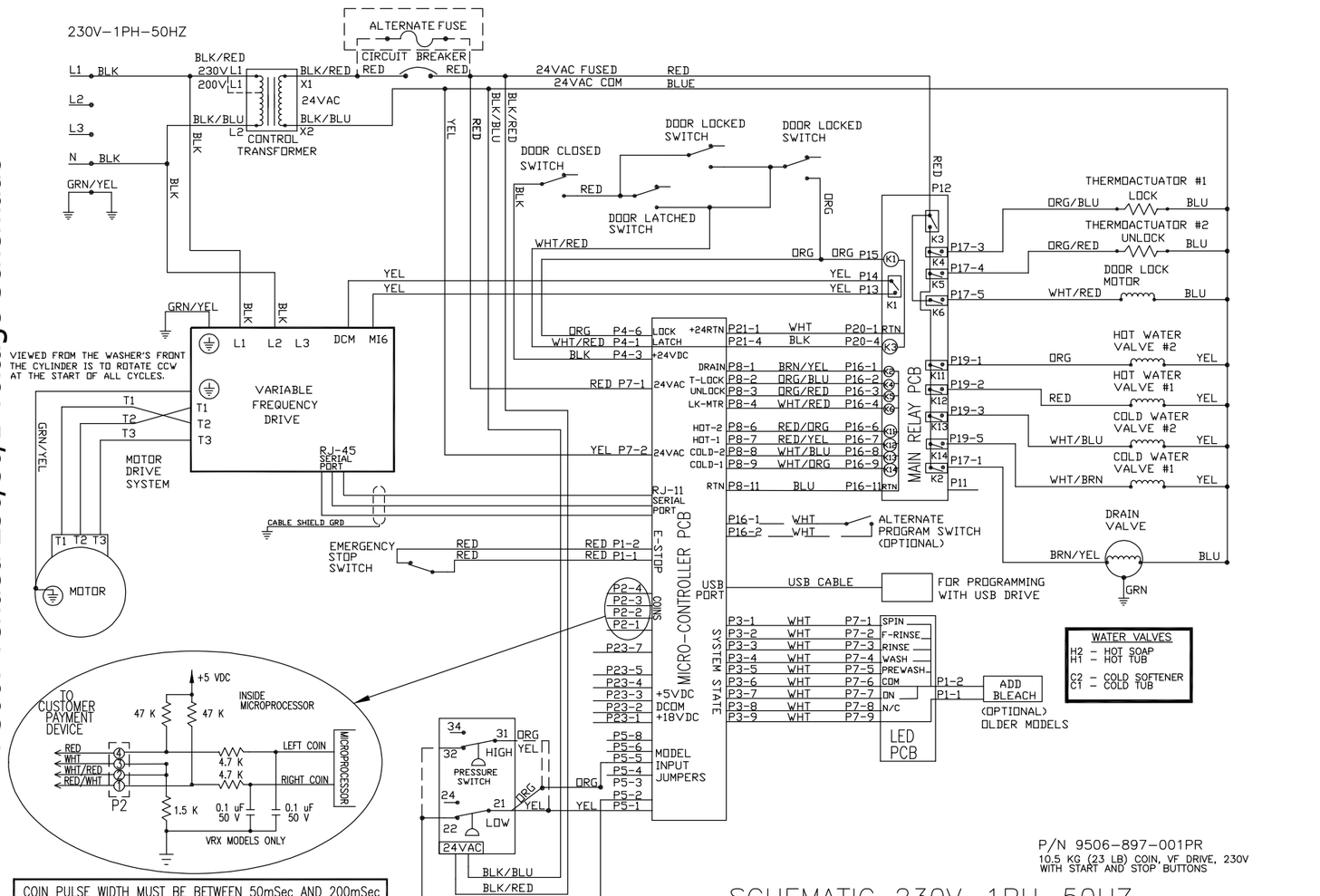

SCHEMATIC 230V–1PH–50HZ

T-400: Vended 230/50/1 Voltage Schematic

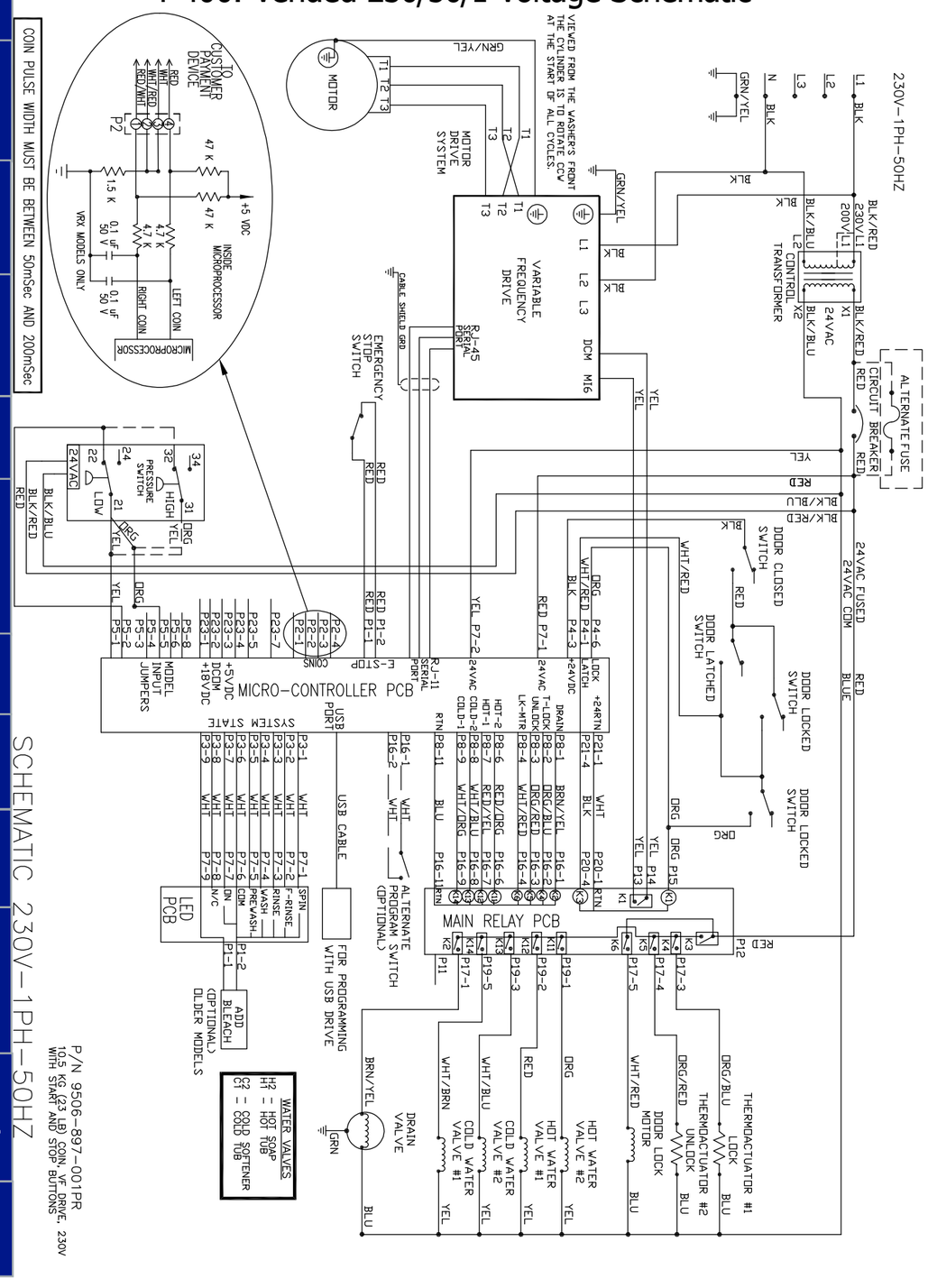

SCHEMATIC 230V–1PH–50HZ

P/N 9506-897-001PR
(23 LB) COIN, VF DRIVE, 230V
WITH START AND STOP BUTTONS

T-400: Vended 230/50/1 Voltage Diagram

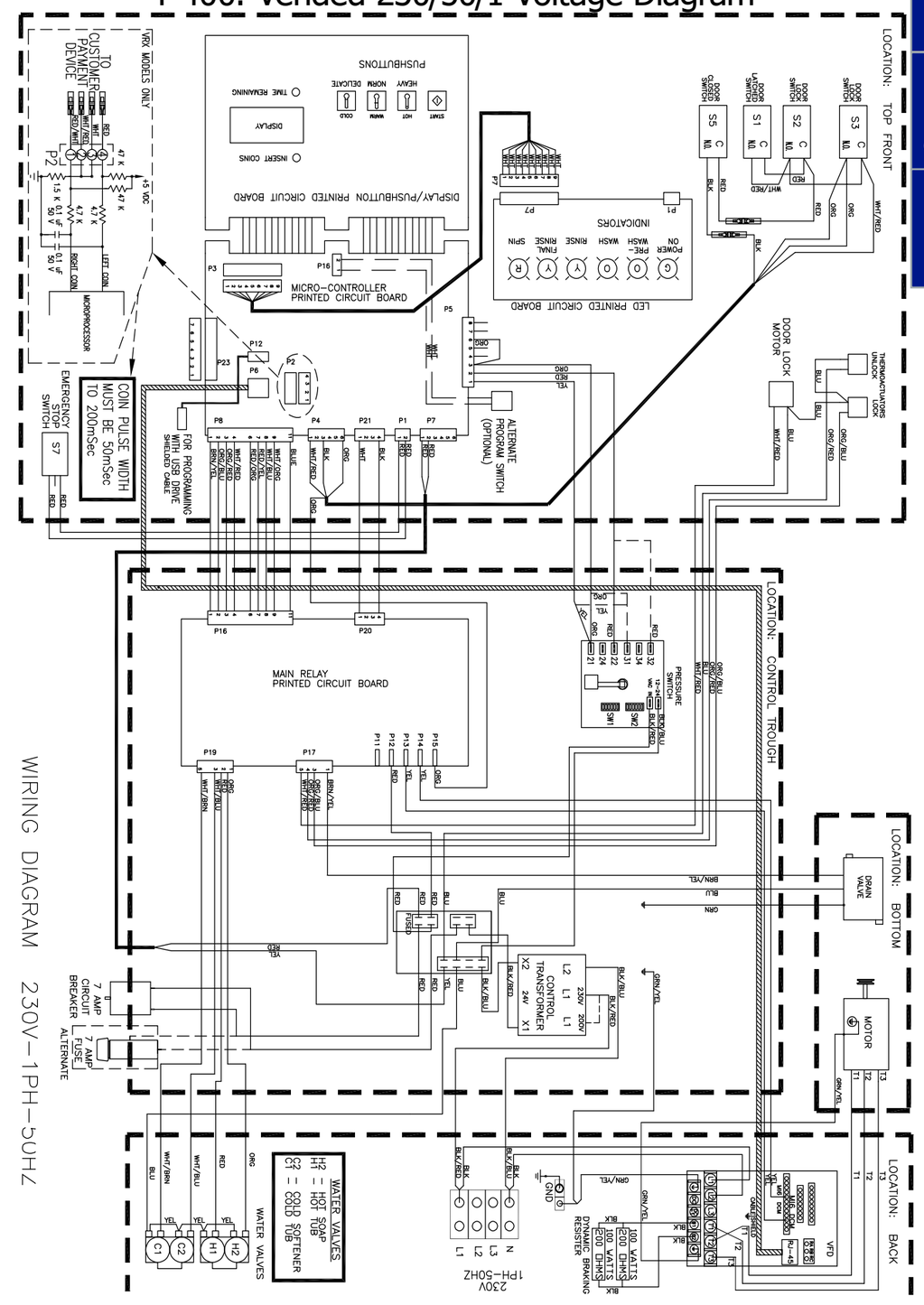

WIRING DIAGRAM 230V–1PH–50HZ

T-600: Vended 230/50/1 Voltage Diagram

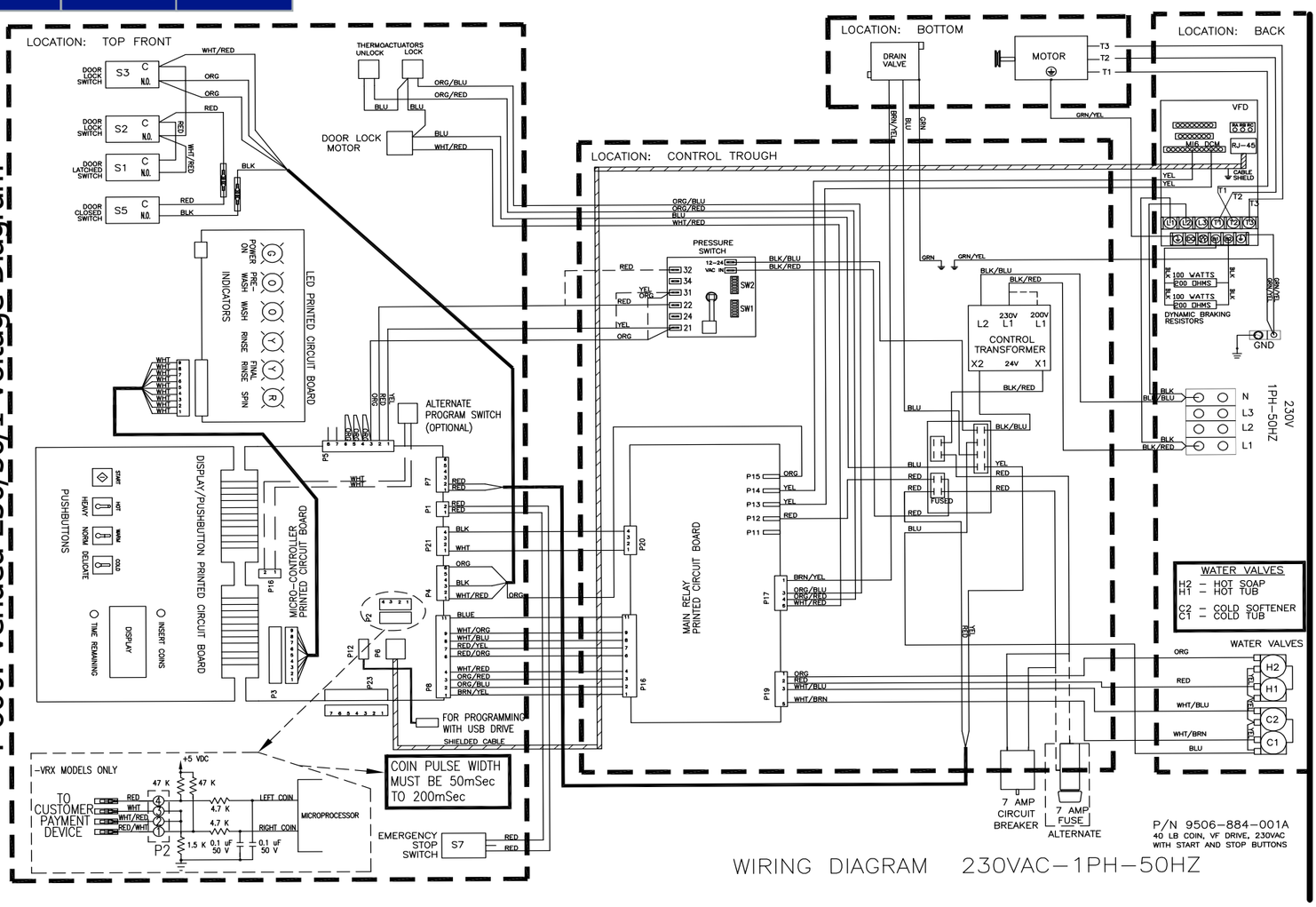

WIRING DIAGRAM 230VAC-1PH-50HZ

T-600: Vended 230/50/1 Voltage Schematic

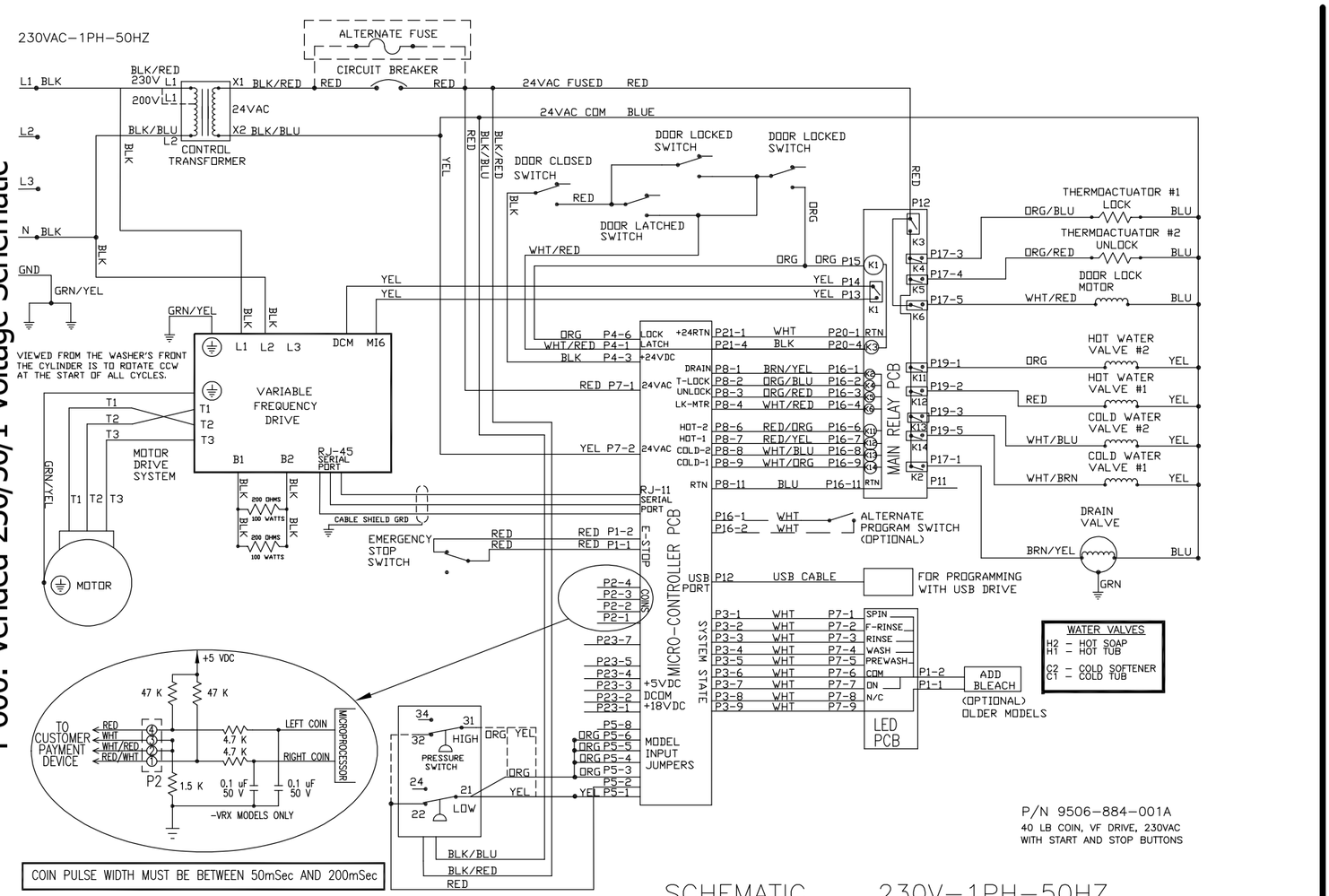

SCHEMATIC 230V-1PH-50HZ