DEXTER®
LAUNDRY

USE THE BLUE TABS LOCATED ON THE RIGHT AND LEFT SIDES OF THE FOLLOWING DOCUMENT TO ADVANCE TO EACH SECTION.

Kits, Assemblies, & Common Parts

Description	Part Number
Kit – Add Water Option	9732-358-004
Kit, Replacement for 9376-317-005	9732-357-001
Temperature Probe	9501-004-004
Controls	9799-027-001
Overtemp Thermostat	9576-207-006
Lint Screen Assembly	9822-033-001
Door Switch (Round)	9539-492-001
Door Switch (Square)	9539-501-001
Ignition Control Assembly	9857-182-001
Electrode Assembly	9875-002-003
Hi-Limit Thermostat	9576-203-002
Relay	5192-285-004
Transformer	8711-007-002
Airflow Switch	9539-461-009
Door Handle	9244-093-001
Spider/Trunnion	9568-016-001
Motor Belt	9040-076-008
Tumbler Belt	9040-076-005
Gap Tool	8545-065-001

Section 5:

Dryer Parts Data

DN0120NE-11EO1_
DN0120NE-10EO1_

Dryer Cabinet Front Panel

Key	Description	T-120	
*	Loading Door Complete Wht/SS/Blk	9960-331-003	1
1	Door Assy, Loading (Ring only) SS	9960-330-001	1
1	Door Assy, Loading (Ring only) Blk (after D1.22290.005)	9960-329-004	1
2	Plate Assy, Hinge (Wht)	9982-398-003	1
*	Cover-Hinge Back, Black	9074-340-002	1
*	Screw-10Bx3/8, Black	9545-008-010	2
*	Screw Hinge to Door	9545-018-018	4
*	Nut, Hinge to Door	8640-414-006	4
3	Glass, Door	9212-002-006	1
*	Adhesive-Door Glass, 10.3 oz. tube (24-Hour Cure Time)	8561-138-002	1
5	Gasket, Door Outer Rim (Black)	9206-420-007	1
6	Handle, Loading Door	9244-093-001	1
*	Screw, Handle	9545-018-017	2
7	Stud Door Catch 7/8”	9531-033-002	1
8	Nut-Hex, #10-32	8640-413-001	1
9	Nut, Acorn	8640-413-003	1
*	Catch, Loading Door	9086-015-002	2
*	Rivet	9491-009-004	2
10	Strap, Hinge (Black)	9966-014-002	1
*	Channel Assy.-Front Panel	9947-024-001	1
*	Screw-Phillips, 10-32x1/2 Chrome	9545-012-028	4
*	Screw-Phillips-Counter sink, 10-32x1/2 Chrome	9545-012-003	2
11	Screw-Special, Hinge to Door	9545-052-001	1
*	Nut-Allen, 1/4-20	8640-439-001	1
12	Washer-Fiber/Plastic	8641-436-006	1
13	Front Panel Assy (Wht)	9989-688-008	1
14	Screw-Phillips, 10Bx1 3/4	9545-008-014	10
15	Washer-Finish	8641-585-001	10
*	Nut-Spring	8640-399-001	10
16	Screw-Torx, 10AB x 3/4”, White “T-20”	9545-008-035	8
*	Insulation-Front Panel	9277-065-001	1
*	Label-Warning	8502-758-001	1
18	Plug-Front Panel, Optional Door Switch Location	9456-055-001	1
*	Switch-Door Closed	9539-501-001	1
*	Wire-Assy-Blu, 23”	8220-063-049	1
19	Plug, 1/4”, Locking	9456-051-001	6
*	Plug-2”	9456-041-009	1
21	Box-Control	9041-107-002	1
*	Cabinet Touch Up Paint (White)	9472-001-013	1

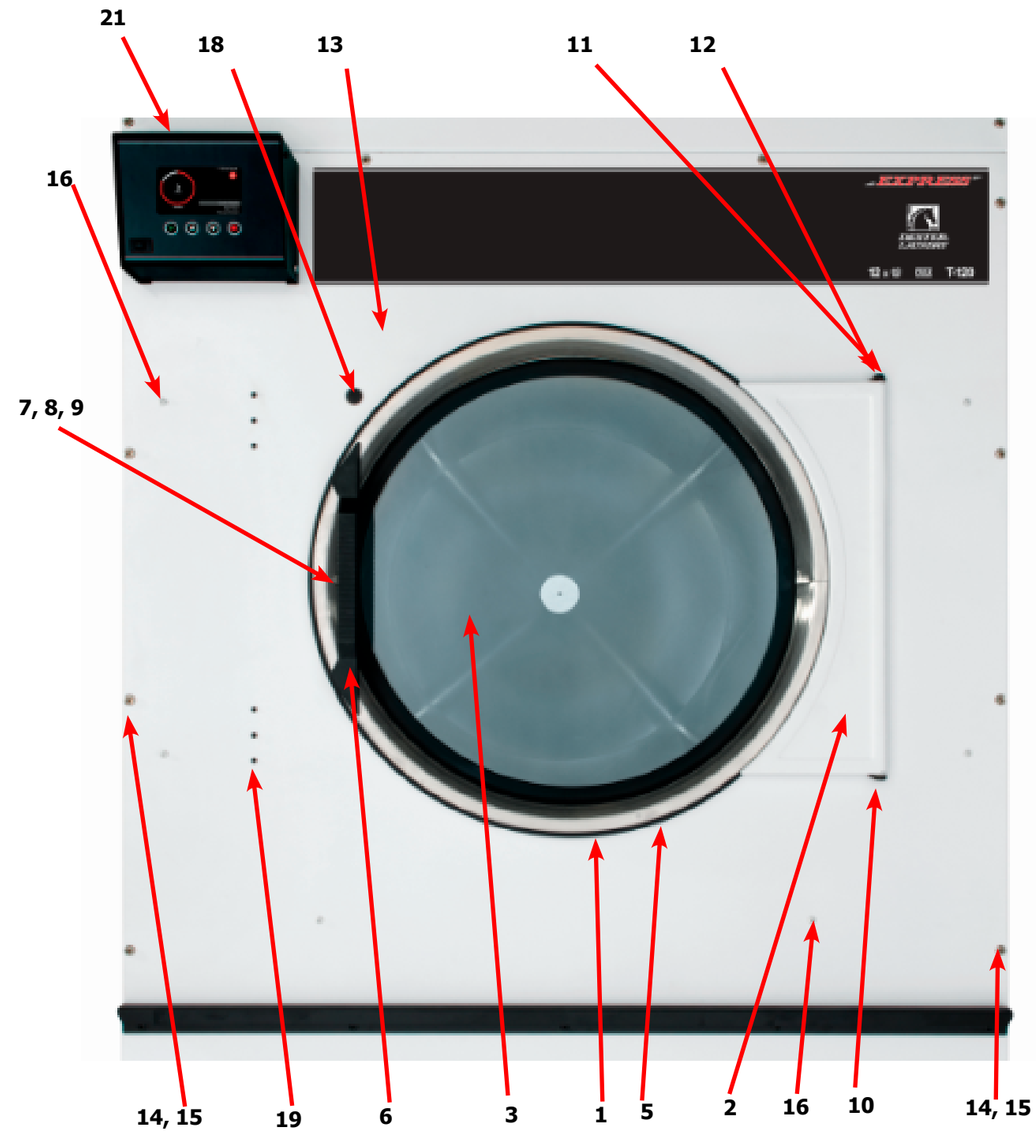

Dryer Cabinet Group Continued

Key	Description	T-120	QTY
*	Door Assy-Upper, OPL (Wht)	9960-328-004	1
*	Screw-Phillips, 10Bx1 3/4	9545-008-014	4
*	Washer-Finish	8641-585-001	4
*	Nut-Spring	8640-399-001	4
5	Box-Control Front, Black	9041-107-002	1
6	Screw-10ABx3/8	9545-008-024	4
*	Screw-10-32 x 1/2, Chrome	9545-012-003	2
8	Plate Assembly-Meter, Black	9982-394-002	1
9	Nut-Elastic Stop, #10-32	8640-413-004	2
11	Display Control	9857-230-002	1
12	Nut, #6-32	8640-411-003	3
14	Nut, #6-32	8641-411-003	1
15	Screw, #10-32 x1/2 Green	9545-008-027	1
16	Lock Washer #10	8641-582-006	1
19	Screw Torx-6BSD x 1/2, BLK, "T10"	9545-031-009	2
20	Harness-Display Control	9627-922-001	1
*	Harness-Temp Probe	9627-917-002	1
22	Plug-2"	9456-041-009	1
23	PCB Assy. Main Control	9799-027-001	1
24	Plate Assy. - Control Board	9982-395-001	1
25	PCB Assy. - Control Board (Only)	9474-003-001	1
26	Screw - panhdcr, #6-32 x 1/2 (SS)	9545-044-010	6
27	Lockwasher - exttooth, #6	8641-582-005	6

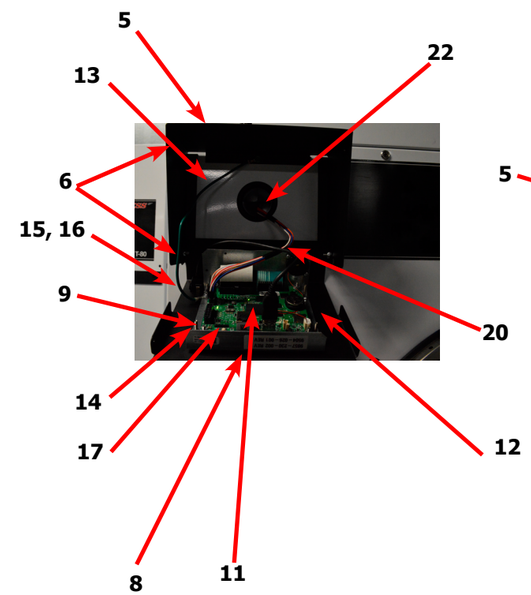

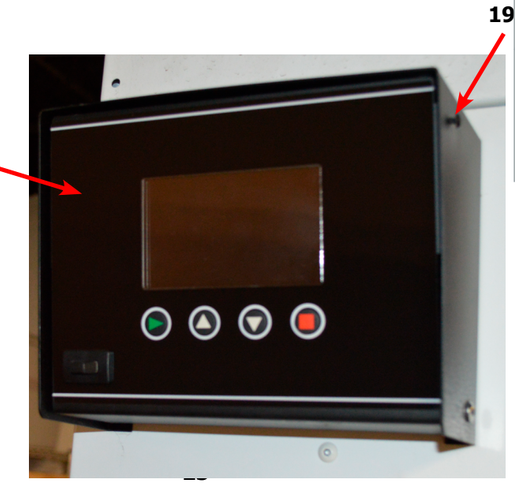

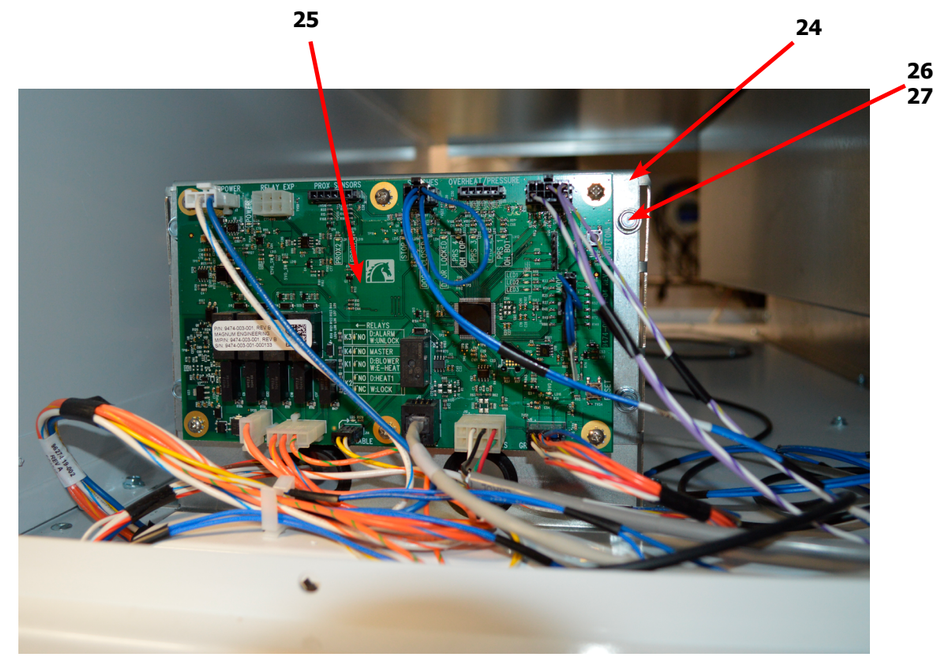

Dryer Cabinet Group Continued

Key	Description	T-120	QTY
*	Assembly-Door-Lower Service, OPL, Wht (includes the below parts)	9960-324-006	1
1	Door-Lower Service, OPL, Wht	9108-149-002	1
*	Bracket-Door Switch	9029-226-001	*
*	Rivet, 1/8 Low Profile	9491-009-004	*

Key	Description	T-120	QTY
*	Screw-Phollips, 10Bx3/8, Black	9545-008-010	5
*	Handle,Turn-Door, Lower Service OPL	9244-084-002	2
*	Trim-Lower Kick, Black	9578-101-002	1
*	Screw-Phollips, 10Bx3/8, Black	9545-008-010	5
*	Bracket, Lower Service, (Hinge Bracket)	9029-226-001	2
*	Rivet, 1/8 Low Profile	9491-009-004	4
2	Switch-Door (Square)	9539-501-001	1
3	Hinge-Door, Lower	9243-084-002	1
*	Screw-5/16, 10ABx3/8	9545-008-024	5
4	Screen Assy, Lint	9822-033-001	1
*	Footing Foot	9188-016-001	4

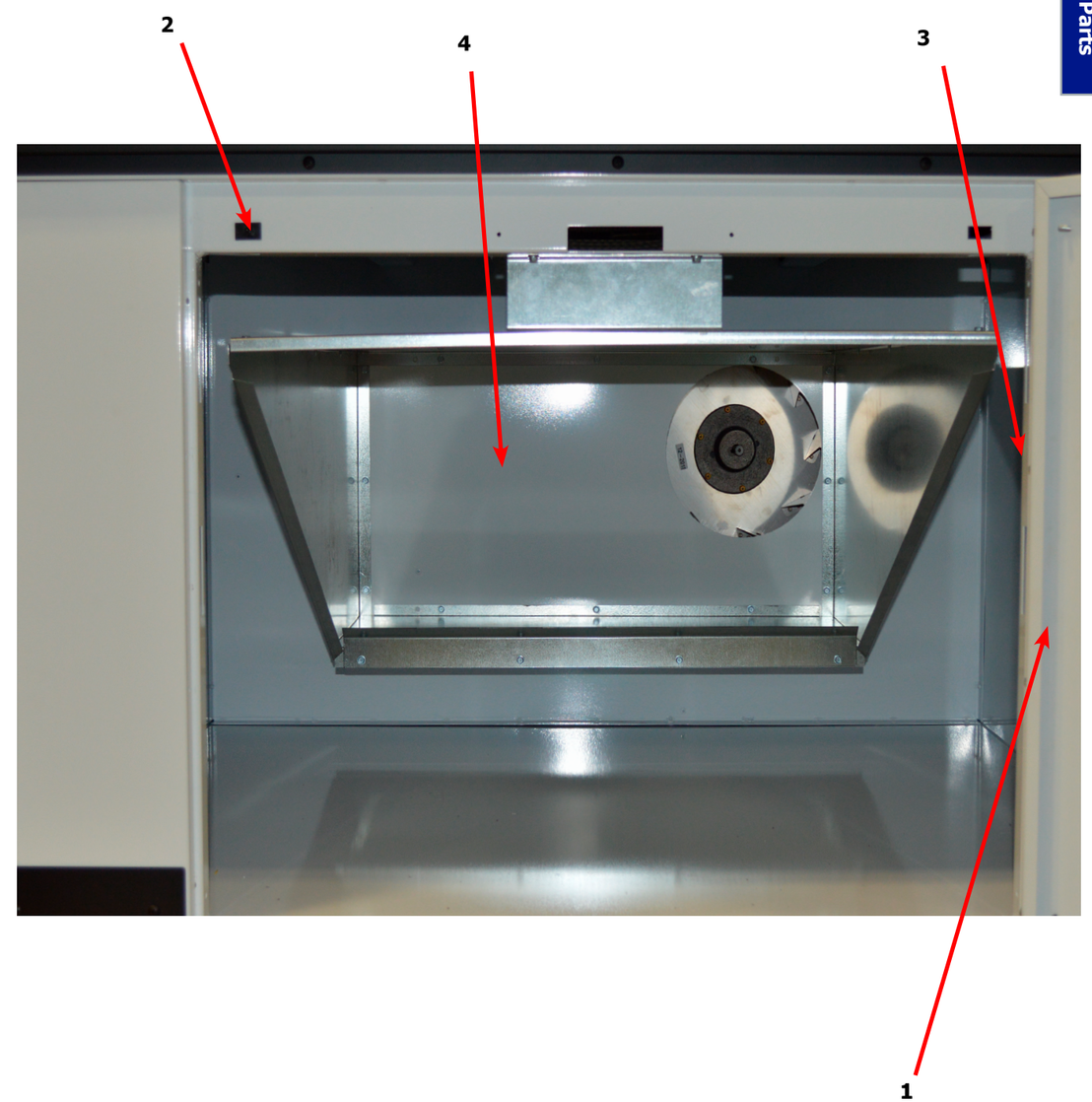

Dryer Cabinet Group Continued

Key	Description	T-120	QTY
1	Panel Assy.-Upper Right	9989-549-002	1
*	Screw, #10ABx1/2	9545-008-024	2
2	Insulation-Right Upper, Burner Area	9277-041-022	1
3	Panel Assy.-Upper Left	9989-550-002	1
*	Screw, #10ABx1/2	9545-008-024	2
4	Insulation Tumbler Area, Right (Front & Back)	9277-051-005	2
4	Insulation Tumbler Area, Right (Center)	9277-051-006	1
5	Insulation Tumbler Area, Left (Front & Back)	9277-051-005	2
5	Insulation Tumbler Area, Left (Center)	9277-051-006	1
6	Switch-Door Closure (Cicurlar)	9539-492-001	2
*	Switch-Door Closure (Square)	9539-501-001	2
*	Screen Assy, Lint	9822-033-001	1
*	Lint Hood Assembly	9834-012-001	1
7	Lint Hood, Top & Sides	9240-048-001	1
8	Lint Hood, Bottom	9058-030-001	1
9	Lint Hood, Angle	9003-333-001	1
10	Screw,- 10ABx3/8	9545-008-024	21
11	Hinge-Door, Lower	9243-083-002	1
*	Screw-10ABx3/8	9545-008-024	5
12	Impeller, w/set screws	9278-041-001	1
13	Harness -Temp Probe	9627-917-002	1
14	Wire Nut, #71B	8640-276-005	2
15	Temp Probe	9501-004-004	1
16	Screw-Phillips, 8Bx1/4	9545-045-005	1
17	Bracket, Temp Probe	9029-111-001	1
18	Screw, 8AB x 3/8	9545-045-008	2
19	Trim-Edge, Lint Hood	9578-092-003	2

120Lb. Temp Probe

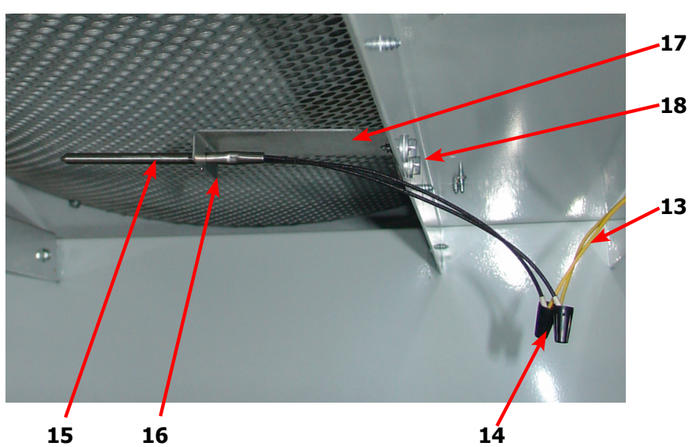

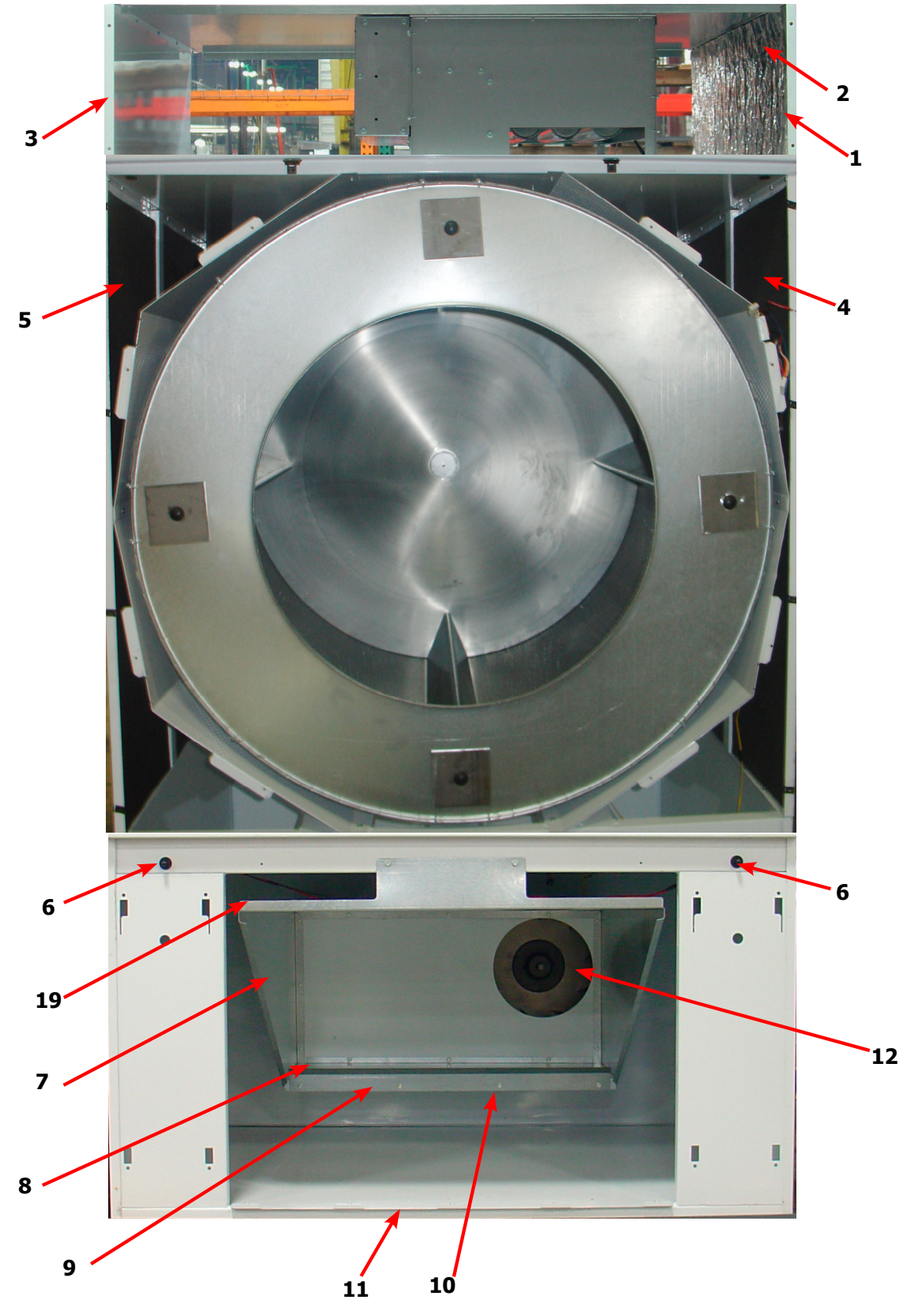

Dryer Modular Cabinet Group 120lb. (After Serial D1.23179.001)

Key	Description	T80	QTY
1	Cabinet Base Assembly	9945-172-001	1
*	Lower Back Panel Assembly	9989-754-002	1
2	Lower Cabinet RH Side Panel	9444-125-003	1
3	Lower Cabinet LH Side Panel	9444-125-004	1
4	Lower Cabinet Front Channel	9081-217-001	1
*	Upper Back Panel Assembly	9989-717-002	1
5	RH Middle Side Panel Assembly	9989-543-003	1
6	LH Middle Side Panel Assembly	9989-543-004	1
7	Cabinet Top Cover	9074-356-001	1
8	Baffle	9049-135-001	4
*	Baffle Stiffener Angle	9003-388-001	2
9	RH Upper Side Panel Assembly	9989-549-002	1
10	LH Upper Side Panel Assembly	9989-550-002	1
*	10abx3/8 Screw	9545-008-024	92
*	3/16 Blind Rivet	9491-009-001	131
*	Wht 3/16 Blind Rivet	9491-009-005	58
*	Hex kep Nut 1/4-20unc, 2b	8640-414-006	10

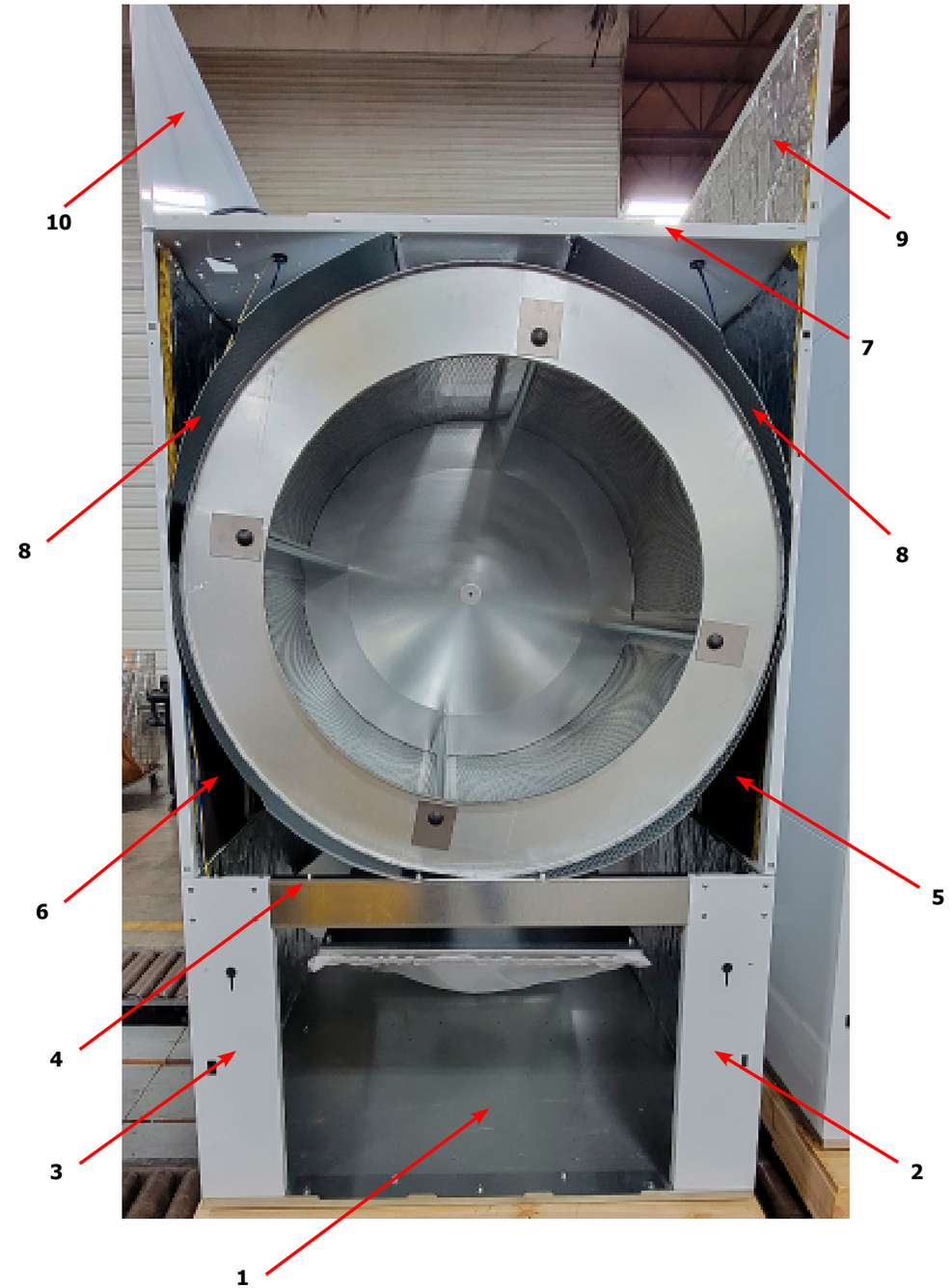

Dryer Rear View 120Lb Reversing

Key	Description	T-120	QTY
1	Pulley, Driven	9453-168-003	1
2	Tolerance Ring	9487-234-006	1
3	Washer -Flat	8641-581-032	1
4	LockWasher - IntTooth, 1”	8641-582-018	1
5	Screw, 5/8-11 x 1 1/2	9545-060-001	1
6	Belt-Driven	9040-076-005	2
*	Impeller, 5” x 16”	9278-041-001	1
7	Plate Assembly-Impeller	9982-375-002	1
8	Nut-Wiz Lock, 5/16-18	8640-400-003	6
*	Gasket-Impeller Housing	9206-428-002	1
9	Motor-Blower -10 Before Serial # D1.19254.036	9376-317-005	1
9	Motor-Blower -11 Before Serial # D1.19254.036	9376-334-001	1
9	Motor-Blower -10 & -11 After Serial # D1.19254.036	9376-334-001	1
*	Run Capacitor	5191-108-005	1
*	Start Capacitor	5191-109-005	1
*	Screw, 5/16-18 x 5/8	9545-014-004	4
*	Nut-Wiz Lock, 5/16-18	8640-400-003	4
12	Thermostat-Overtemp	9576-207-006	1
*	Screw-10AB x 3/8	9545-008-006	2
14	Pulley, Intermediate, w/Bearings	9908-051-001	1
*	Bearings	9036-159-011	2
*	Spacer-Bearings	9538-186-001	1
*	Ring-Retaining, Internal	9487-238-006	1
15	Washer-Flat	8641-581-039	1
16	Nut, 5/8-11	8640-425-002	1
17	Belt, Motor	9040-076-008	1
18	Motor, Drive	9376-307-003	1
19	Pulley-Motor	9453-169-012	1
20	Bushing, Motor -Support	9053-074-002	2
21	Rod-Motor Mounting, Black	9497-222-008	1
22	Collar-Shaft, w/Set Screws	9076-052-002	1
23	Chain-Belt tension	9099-012-004	1

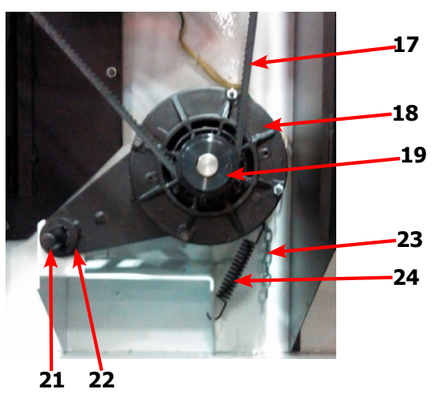

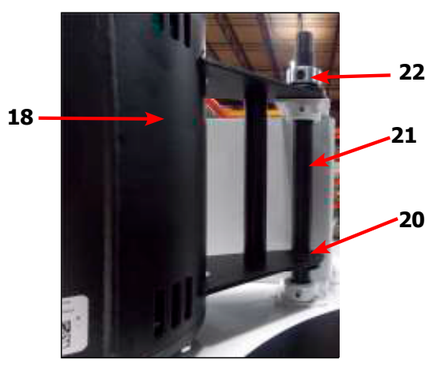

Dryer Rear View 120Lb Reversing

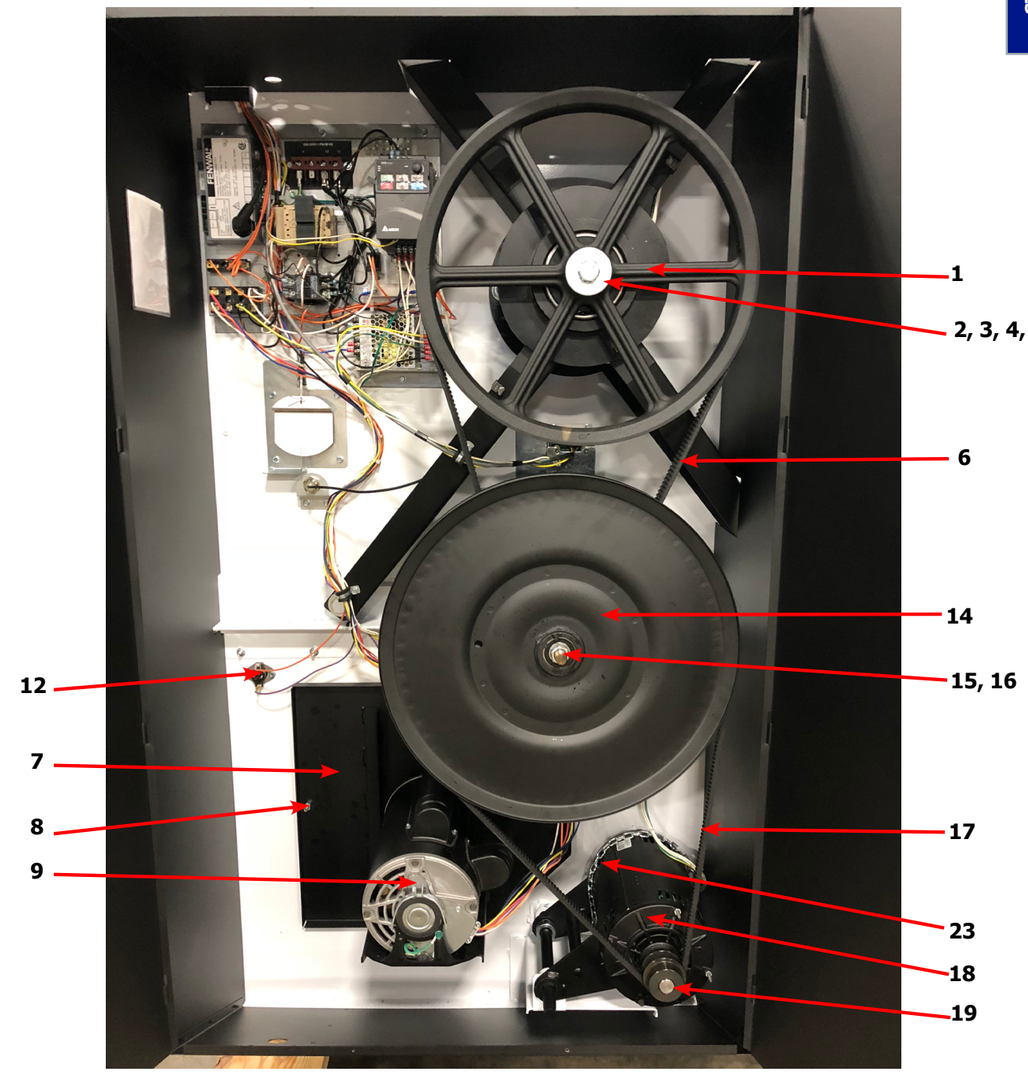

Dryer Rear View 120Lb Reversing Continued

Key	Description	T-120	QTY
6	Plate Assembly-Intermediate, Tension	9982-378-002	1
7	Rod-Intermediate, Pivot	9497-230-002	1
8	Collar, Locking	9076-060-001	1
9	Bolt, 1/2-13 x 1 1/2	9545-017-001	2
10	Thermostat-Overtemp	9576-207-006	1
11	Screw-10AB x 3/8	9545-008-006	2
*	Impeller, 5" x 16"	9278-041-001	1
12	Plate Assembly-Impeller	9982-375-002	1
13	Nut-Wiz Lock, 5/16-18	8640-400-003	6
*	Gasket-Impeller Housing	9206-428-002	1
14	Motor-Blower -10 Before Serial # D1.19254.036	9376-317-005	1
14	Motor-Blower -11 Before Serial # D1.19254.036	9376-334-001	1
14	Motor-Blower -10 & -11 After Serial # D1.19254.036	9376-334-001	1
*	Run Capacitor	5191-108-005	1
*	Start Capacitor	5191-109-005	1
15	Screw, 5/16-18 x 5/8	9545-014-004	4
16	Nut-Wiz Lock, 5/16-18	8640-400-003	4
17	Motor, Drive	9376-307-003	1
18	Pulley-Motor	9453-169-012	1
*	Bushing, Motor -Support	9053-074-002	2
19	Rod-Motor Mounting, Black	9497-222-008	1
20	Collar-Shaft, w/Set Screws	9076-052-002	1
21	Chain-Belt tension	9099-012-004	1
*	Hook-S Type	9248-022-002	1
*	Spring, Belt Tension	9534-151-000	1

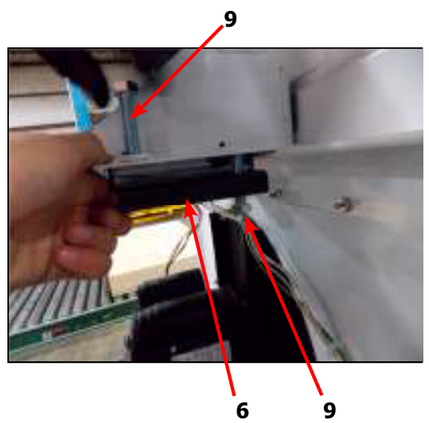

Dryer Rear View 120Lb Reversing Continued

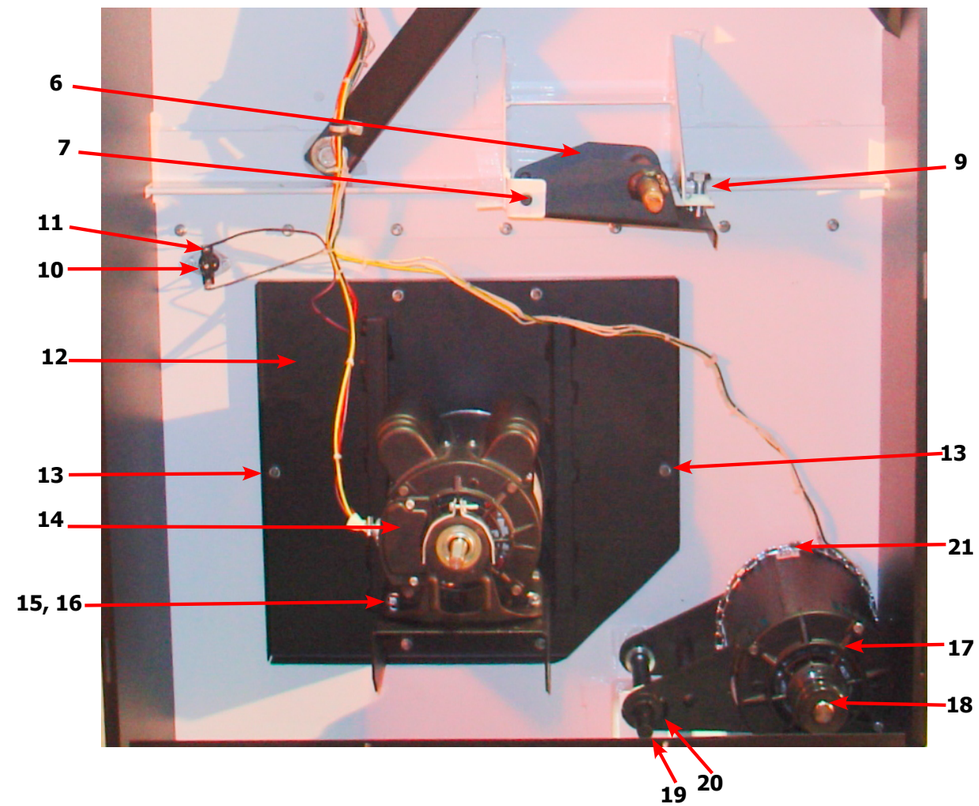

Dryer Rear View-Guard & Exhaust

Key	Description	T-120	QTY
1	Cover Cabinet	9074-356-001	1
*	Screw-5/16, 10ABx3/8	9545-008-024	16
2	Duct-Transition, 12" to 10"	9109-124-001	1
*	Screws-10-16 x 1/2	9545-008-003	3
*	Guard-Side, Right	9208-111-002	1
*	Screw-Torx T20, 10B x 3/8, BLK	9545-008-034	7
3	Guard-Side, Left	9208-110-002	1
*	Screw-Torx T20, 10B x 3/8, BLK	9545-008-034	8
4	Guard-Top	9208-112-002	1
*	Screw-Torx T20, 10B x 3/8, BLK	9545-008-034	11
5	Guard-Bottom	9208-113-002	1
*	Screw-Torx T20, 10B x 3/8, BLK	9545-008-034	6
6	Guard-Wires	9208-115-002	1
*	Screw-Torx T20, 10B x 3/8, BLK	9545-008-034	2
7	Guard-Door, Right	9208-114-004	1
*	Screw-Torx T20, 10B x 3/8, BLK	9545-008-034	6
8	Guard-Door, Left	9208-114-003	1
9	Screw-Torx T20, 10B x 3/8, BLK	9545-008-034	4
*	Nut-Spring, U-type	8640-399-001	4
*	Booklet-Owners	8514-291-001	1
10	Diagram -11	9507-003-001	1
10	Diagram -10	9507-048-001	
11	Label-Warning & Notice	8502-763-001	1
12	Label-Instructions	8502-645-001	1
13	Decal-Lighting & Clearance	8527-151-001	1
14	Label-High Voltage	8502-614-004	1

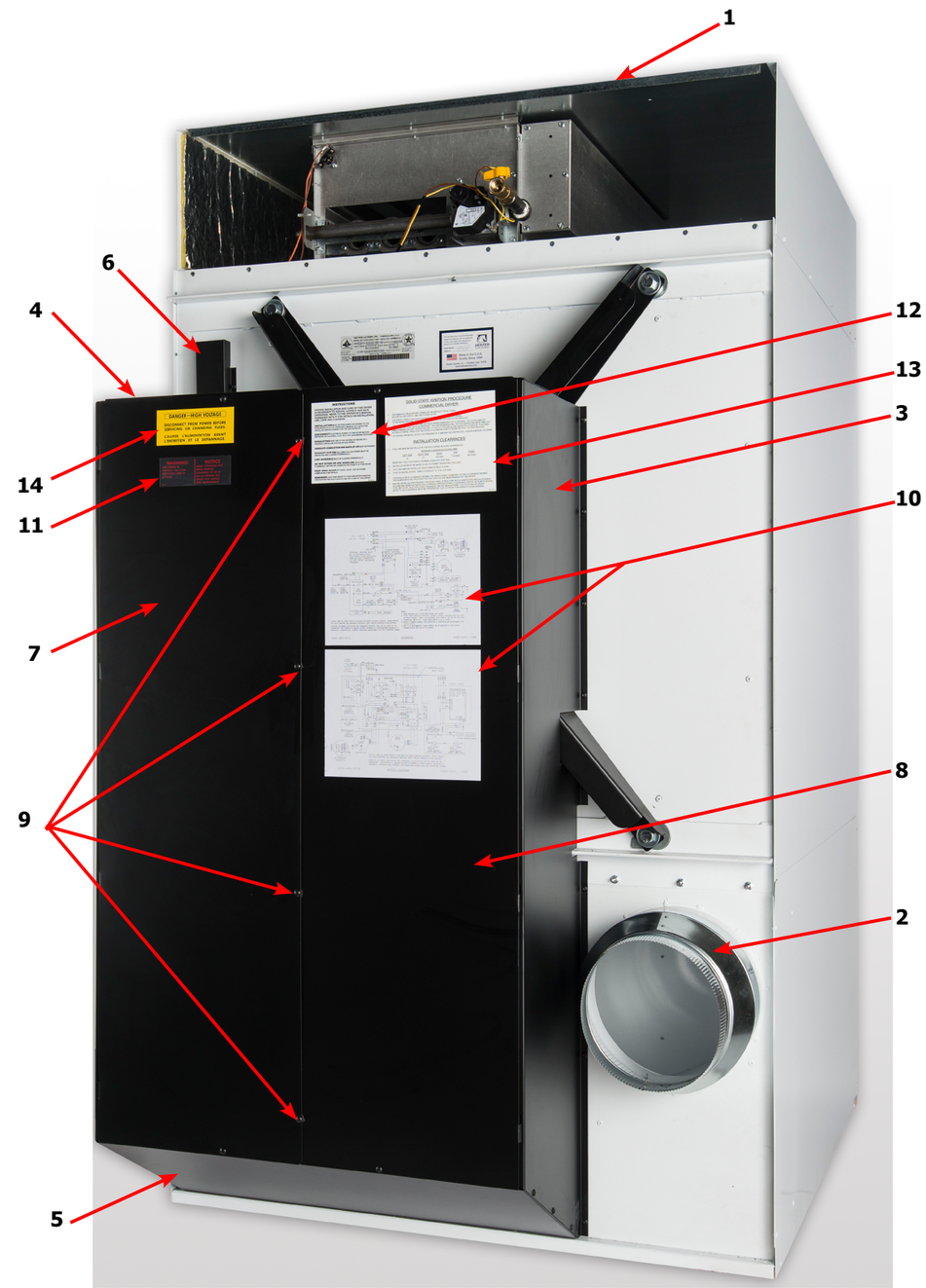

Dryer Rear View-Bearing Housing 120Lb

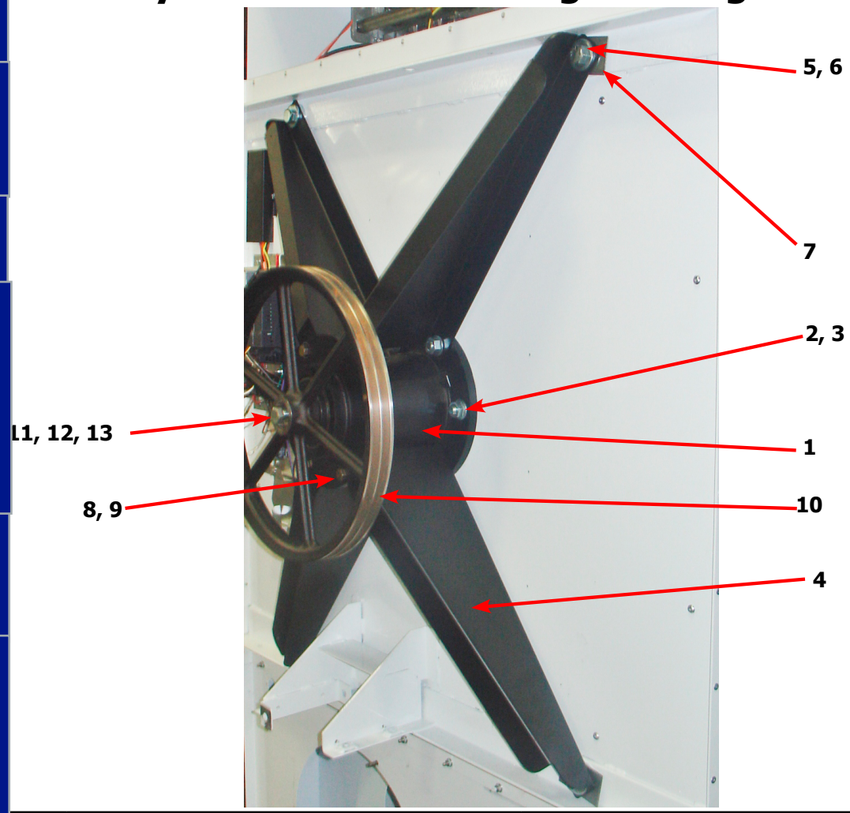

Key	Description	T-120	QTY
	Bearing Housing Complete Assy (Includes bearings & Spacer)	9803-186-001	1
1	Housing, Bearing	9241-180-002	1
*	Ring, Retaining-Internal	9487-238-003	1
*	Bearing, Ball, Front	9036-159-005	1
*	Spacer, Bearing	9538-167-001	1
*	Bearing, Ball, Rear	9036-159-004	1
*	Washer, Flat	8641-581-040	6
2	Screw-5/8"-11 x 1 1/2"	9545-060-001	6
3	Nut-Whizlock, 5/8" x 11	8640-425-001	6
4	Arm-Support Housing	9001-065-002	4
5	Screw-5/8-11 x 1 1/2	9545-060-001	4
6	Washer, Flat 5/8"	8641-581-038	4
7	Shim	9552-045-001	AR
8	Screw-7/16"-14 x 1 1/2"	9545-059-003	4
9	Nut-Whizlock, 7/16"	8640-416-005	4
*	Tolerance Ring	9487-234-006	1
10	Pulley Driven	9453-168-003	1
11	Washer, Flat 5/8" x 2 1/4"	8641-581-032	1
12	Lock Washer Spring, 1/2	8641-582-018	1
13	Screw, 5/8-11 x 1 1/2"	9545-060-001	1

Dryer Tumbler Group 120Lb

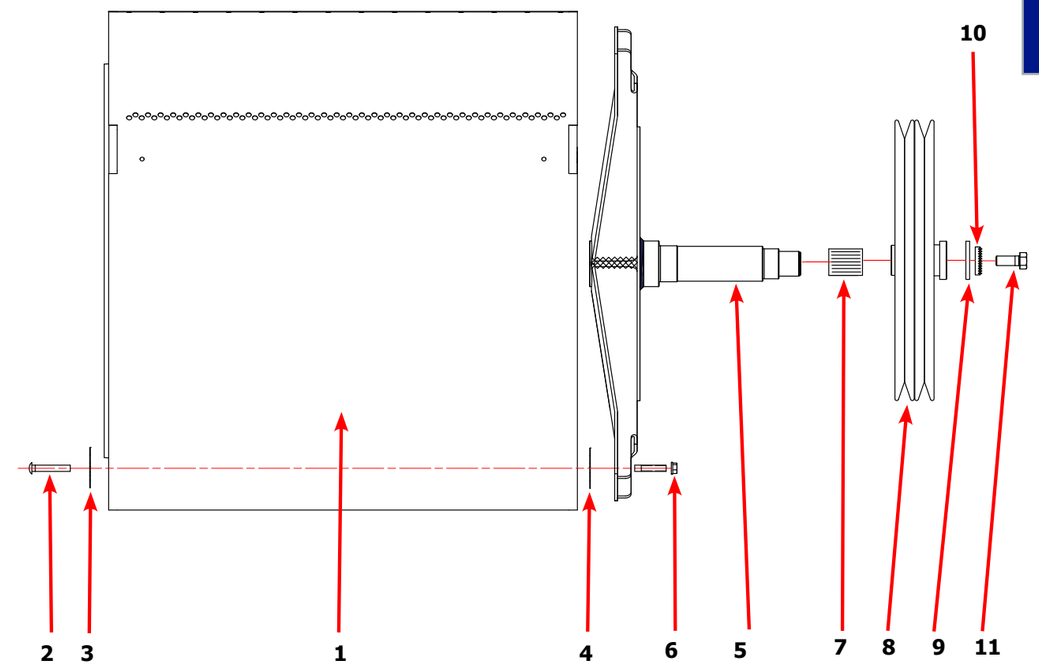

Key	Description	T-120	QTY
*	Tumbler Assy Complete W/Spider (GALV)	9848-160-002	1
1	Tumbler Assy (Galvanized)	9848-159-002	1
2	Rod, Tumbler	9497-226-003	4
3	Plate support, Tie Rod	9452-805-001	4
4	Shim	9552-013-003	AR
5	Spider Assy	9568-016-001	1
6	Nut, Wiz Lock	8640-417-005	4
7	Tolerance Ring	9487-234-006	1
8	Pulley, Driven	9453-168-003	1
9	Washer -Flat	8641-581-032	1
10	LockWasher - IntTooth, 1"	8641-582-018	1
11	Screw, 5/8-11 x 1 1/2	9545-060-001	1

RMC Parts

Key	Description	T-120	QTY
1	Strip-sensing,moisture	9558-034-001	1
*	Rivet-blind,3/16steel	9491-009-001	6
2	Controlsassy-rotatingpcb,rmc	9857-248-001	1
*	Screw-hxwshrundrcuthd,10abx3/8	9545-008-024	2
3	Wiringharness-rmc,sensor,	9627-941-003	1
4	Conduit-rmcwires,	6068-055-001	1
*	Screw-hxwshrundrcuthd,10abx3/8	9545-008-024	2
5	Grommet-3/16id	9209-037-002	1
6	Screw-hxwsrhdsl,10-32ttx1/2grn	9545-008-027	1
*	Lockwasher-exttooth,#10	8641-582-006	1
7	Bracketassy-cabinet,RMC	9985-204-001	2
*	Screw-hxwshdsl,10bx1/4	9545-008-001	4
8	Controlsassy-stationarypcb,RMC	9857-247-001	1
*	Nut-hexkeps,#10-32unf,2b	8640-413-002	2
9	Wiringharn-RMC,can/pwr,	9627-940-003	1
10	Cover-service,RMC	9074-385-001	1
*	Screw-hxwshdsl,10bx1/4	9545-008-001	2

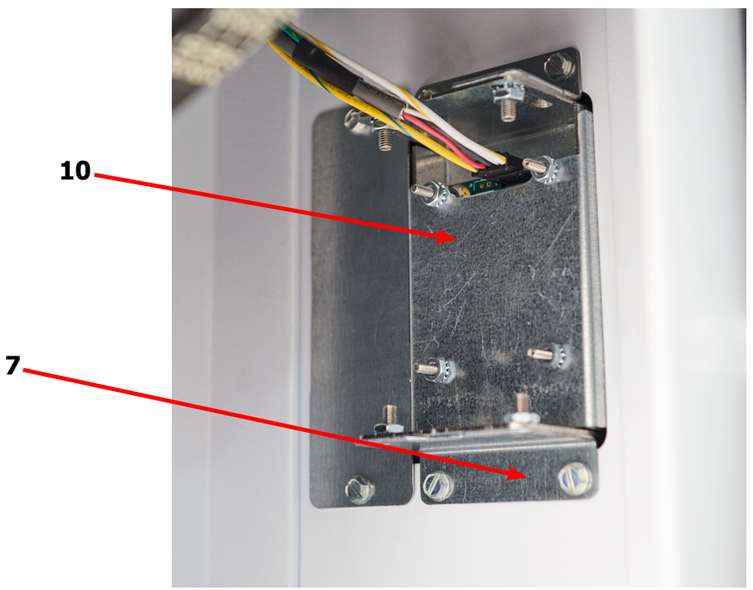

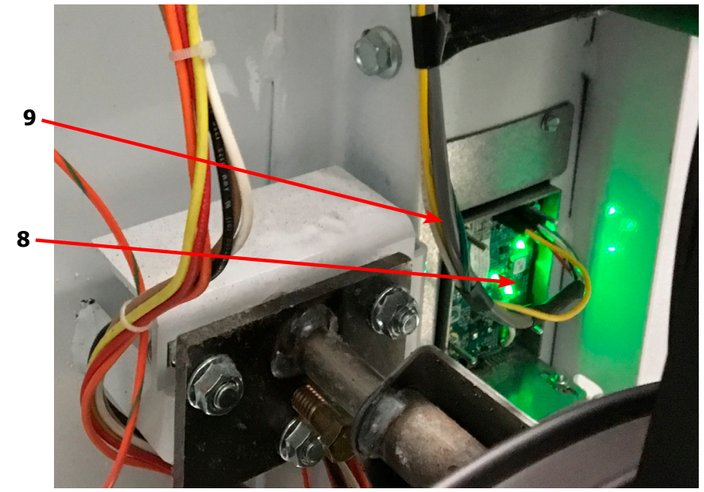

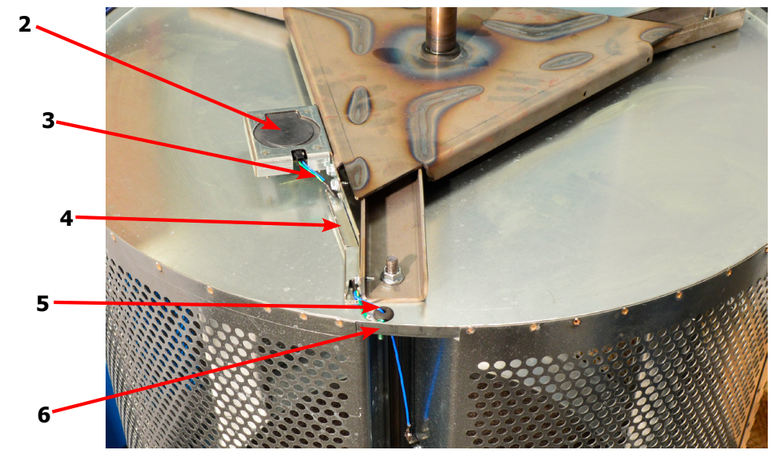

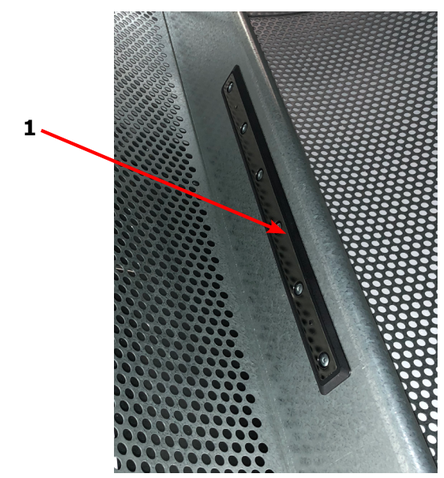

Water Suppression Parts

Key	Description	T-120	QTY
*	FSS Kit	9732-358-004	1
1	Nozzleassy-firesuppression	9872-004-001	1
*	Screw-hxwshrundrcuthd,10abx3/8	9545-008-024	3
2	Tube-nozzle,inlet	9574-262-001	1
3	Bushing-support	9053-083-001	1
*	Screw-hxwshrundrcuthd,10abx3/8	9545-008-024	1
4	Fitting-adapt,3/8nptto1/2hose	8615-115-001	1
5	Valve-water,24v,epdm(nsf)	9379-183-013	1
6	Wireasy-jumper,org/brn,120-6	8220-161-003	1
7	Wireasy-jumper,wht/org,60"-6"	8220-090-019	1
8	Screw-hxwshrhdundct,#10bx1/2	9545-008-026	2
9	Hose-water,3"	9242-453-031	2
10	Fitting-y,1/2	8615-119-001	1
11	Hose-water,"	9242-453-034	1
*	Clamp-hose,worm,1in	8654-117-015	6
*	Clamp-cable	8654-061-001	2
*	Screw-hxwshrundrcuthd,10abx3/8	9545-008-024	2
12	Guard-water valve	9208-145-001	1
*	Screw-hxwshrundrcuthd,10abx3/8	9545-008-024	2
13	Thermostat-fss	9576-212-001	1
*	Screw-hxwshdsltd,8bx1/2	9545-045-002	2
	Wireasy-jumper,org,77"	8220-162-002	1
14	Pcbassy-relay	9799-028-001	1
*	Screw-hxwshrundrcuthd, #10Bx1/2	9545-008-026	2
15	Wireasy-jumper,v2.0,relay pcb	8220-159-006	1
16	Wiringharness-cntrl/relay,v2.0	9627-921-001	1
17	Switch-momentary,n.o.	9539-500-001	1
*	Wireasy-org, 75"	8220-108-016	1
18	Wiringharness-relaypowerboard	9628-006-002	1
*	Wireasy-jumper,wht/org,5"	8220-161-002	1
*	Wireasy-org,11"	8220-108-014	1
19	Bracket-mtg,ohp sensor	9029-315-001	
*	Screw-hxwshrundrcuthd,10abx3/8	9545-008-024	

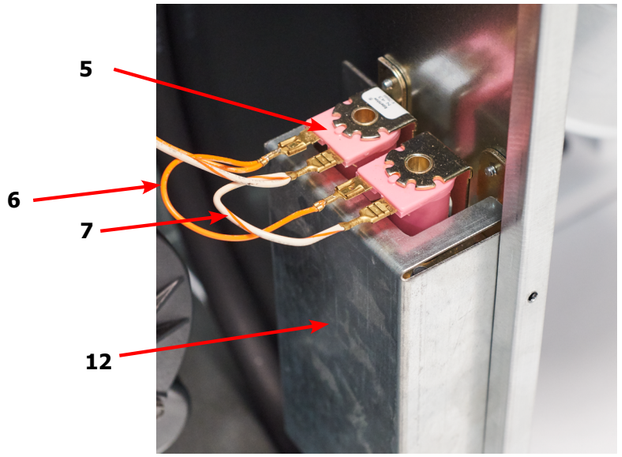

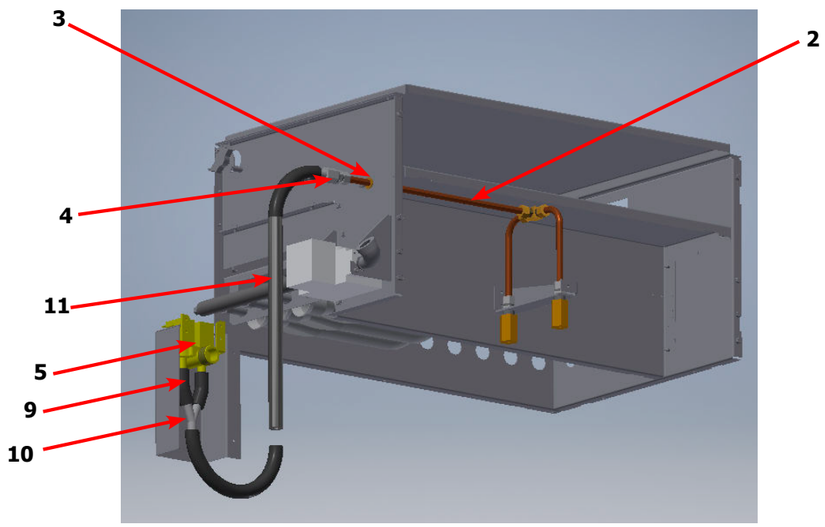

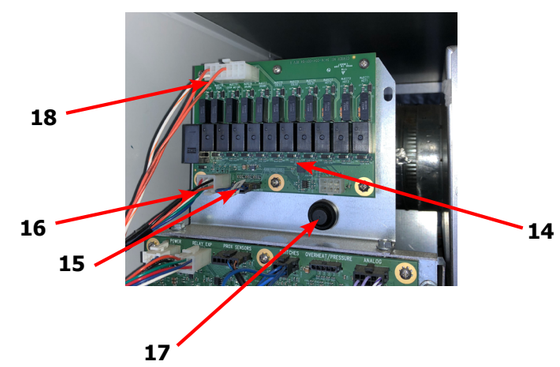

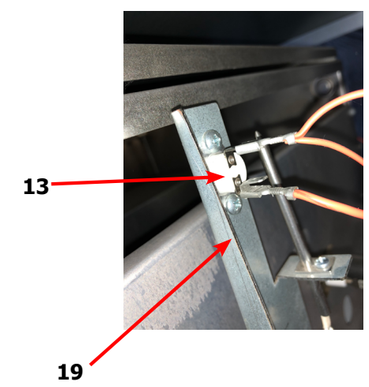

Dryer Burner Housing Group 120Lb

Key	Description	T-120	QTY
*	Housing Assembly, Burner	9803-213-001	1
1	Screw, 10ABx3/8	9545-008-024	55
2	Bracket-Support, Gas Valve	9029-240-001	1
3	Side-Extention Baffle, Burner Housing	9551-049-001	2
4	Burner, Main	9048-022-001	3
5	Baffle-Burner Housing, Extension	9049-105-001	1
6	Panel-Burner Housing, Front	9454-882-001	1
7	Panel-Burner Housing, Back	9454-883-001	1
8	Panel-Burner Housing, Side Left	9551-052-001	1
9	Baffle-Center, Burner	9049-106-001	1
10	Panel-Burner Housing, Side Right	9551-051-001	1
11	Channel-Burner Housing, Right	9081-164-001	1
12	Bracket-Manifold	9029-239-001	1
13	Bracket-Support, Burner, Front	9029-241-001	1
14	Bracket-Support, Burner, Rear	9029-242-001	1
15	Control Assy,Gas Valve, White Rodgers 36H	9857-193-001	1
16	Manifold Assy	9381-013-001	1
17	Top Assembly, Burner Housing	9961-161-001	1
18	Screw, 10Bx1/4	9545-008-001	18
*	Orfice-Natural, #10	9425-069-027	3
*	Orfice-LP, #32	9425-069-009	3
*	Kit, LP Conversion, White Rodgers	9732-102-025	1
19	Thermostat-HI-Limit	9576-203-002	1
20	Electrode-Ignition	9875-002-003	1
21	Bracket-Igniter	9029-243-001	1
22	Elbow-3/4 Street, Black	8615-104-042	1

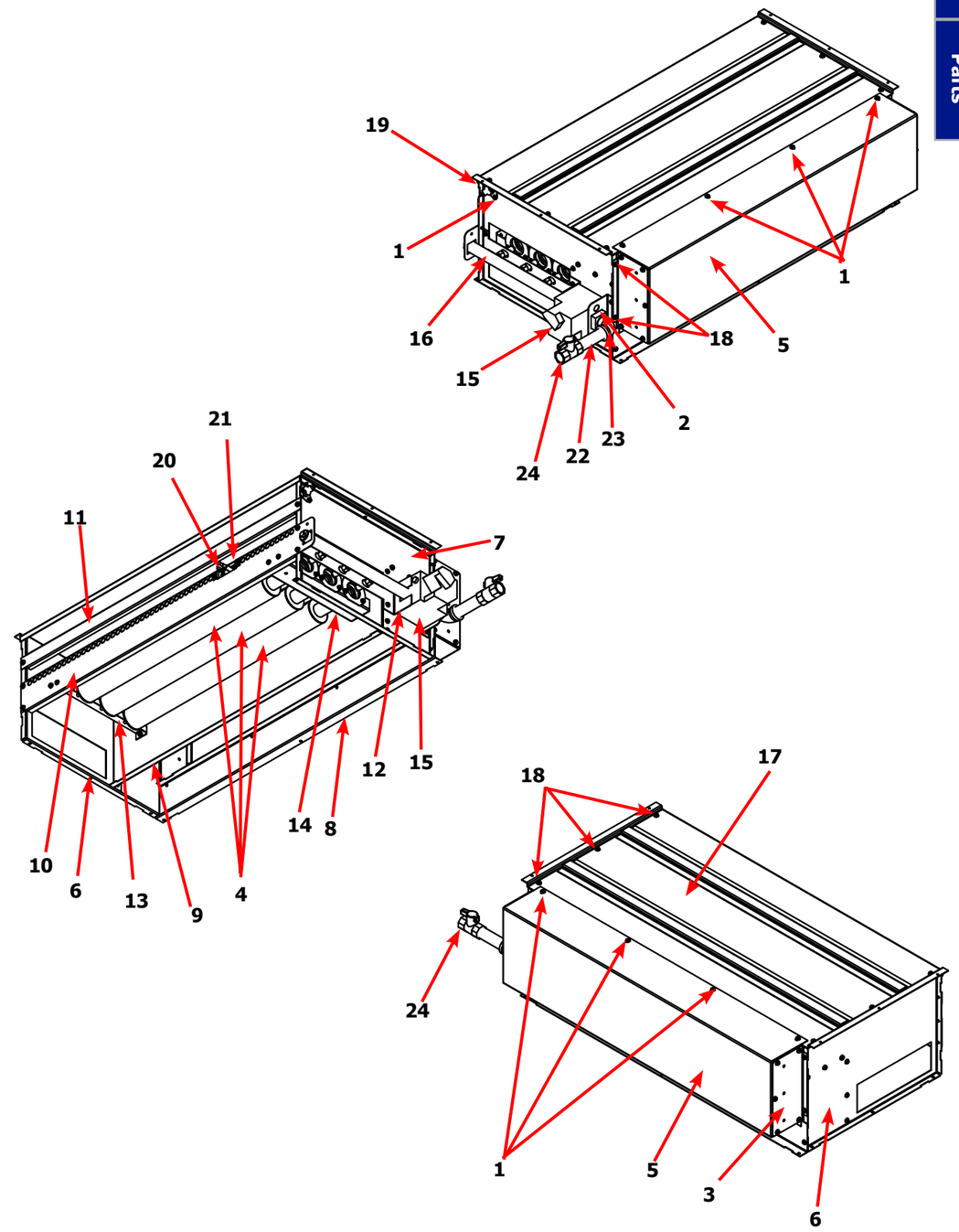

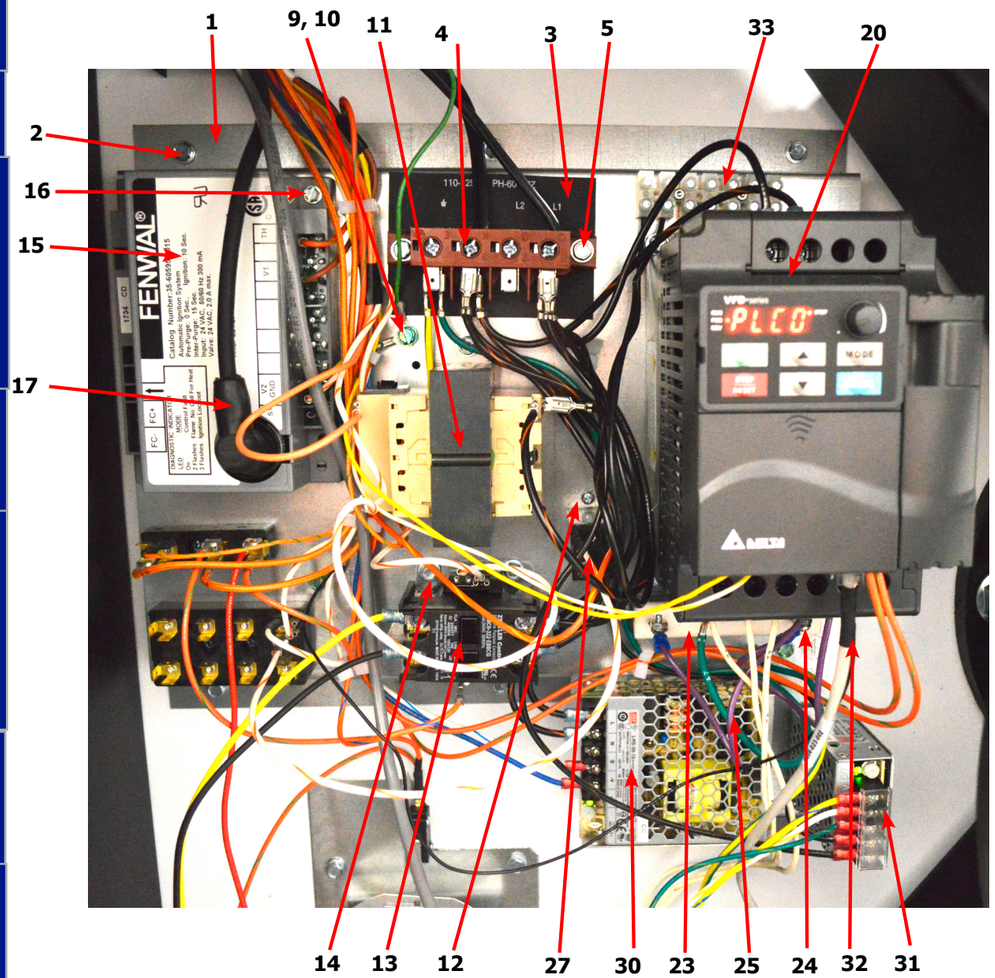

Dryer Rear View-Control Box

Key	Description	T-120	QTY
*	Control Assembly, (1 thru 28) -11	9857-237-001	
*	Control Assembly, (1 thru 28) -10	9857-237-003	
1	Channel-Controls	9081-191-001	1
2	Screw, 5/16-10B-3/8	9545-008-026	6
3	Strip-Marker, Terminal -11	9558-029-006	1
3	Strip-Marker, Terminal -10	9558-029-005	1
4	Terminal Block Assy-Power, 4Pole	9897-035-001	1
5	Screw, 5/16-10AB-3/8	9545-008-024	2
11	Transformer, Control	8711-007-002	1
12	Screw, 5/16-10AB-3/8	9545-008-024	2
13	Relay-Motor, 30Amp, 24VAC	5192-299-002	1
14	Screw, 5/16-10AB-3/8	9545-008-024	2
15	Control Assy, Ignition (Module)	9857-182-001	1
16	Screw-8Bx3/4"	9545-045-007	2
*	Harness, Ignition Module	9627-867-013	1
17	Wire Assy- High Voltage Lead	9631-403-005	1
20	Drive-VD Inverter, 1HP, 208-240VAC -11	9375-032-018	1
20	Drive-VD Inverter, 1HP, 120VAC -10	9375-031-007	1
PS	Key Pad, Delta E-Drive	9150-044-001	1
21	Screw-#10B x 1/2	9545-008-026	4
22	Wire Assy-Green, 18"	8220-092-006	1
23	Resistor-Dynamic Breaking, 200OHM	9483-004-002	1
24	Screw-5/16, 10ABx3/8	9545-008-024	2
25	Wire Assy, Violet 24"	8220-118-003	2
27	Relay, 24VAC	5192-285-004	1
28	Screw, 6B x 3/8	9545-031-003	4
*	Stand off	9527-007-001	7
30	Elecperiph - Power Supply, 12V	9150-054-001	1
*	Screw - pnhdcr, 6AB x 3/4	9150-054-001	2
31	Elecperiph - Power Supply, 24VDC	9150-057-001	1
*	Screw - pnhdcrsems, #4-40 x 3/16	9545-020-009	2
32	Data Cable	9806-023-002	1
33	Terminal Block	9897-032-002	1
*	Screw - pnhdcr, 6AB x 3/4	9545-031-010	2

Dryer Air Flow Switch Assembly

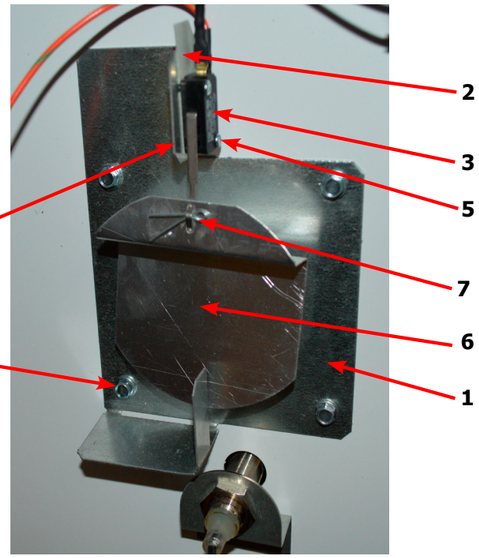

Key	Description	T-120	QTY
*	Air Flow switch Assy	9801-098-001	1
1	Bracket-Airflow switch	9029-200-001	1
2	Shield-Switch	9550-169-003	1
3	Switch-Micro	9539-461-009	1
4	Nut-Twin, 4-40	8640-401-001	1
5	Screw-.625, 4-40	9545-020-001	2
6	Actuator-Air Flow Switch	9008-007-001	1
7	Pin-Cotter, .09375x.75	9451-169-002	1
8	Screw, 10ABx3/8	9545-008-024	4

Notes

WIRING OF THE FSS SYSTEM USING THE SAME TRANSFORMER AND TERMINAL BLOCK FROM SHEET 1

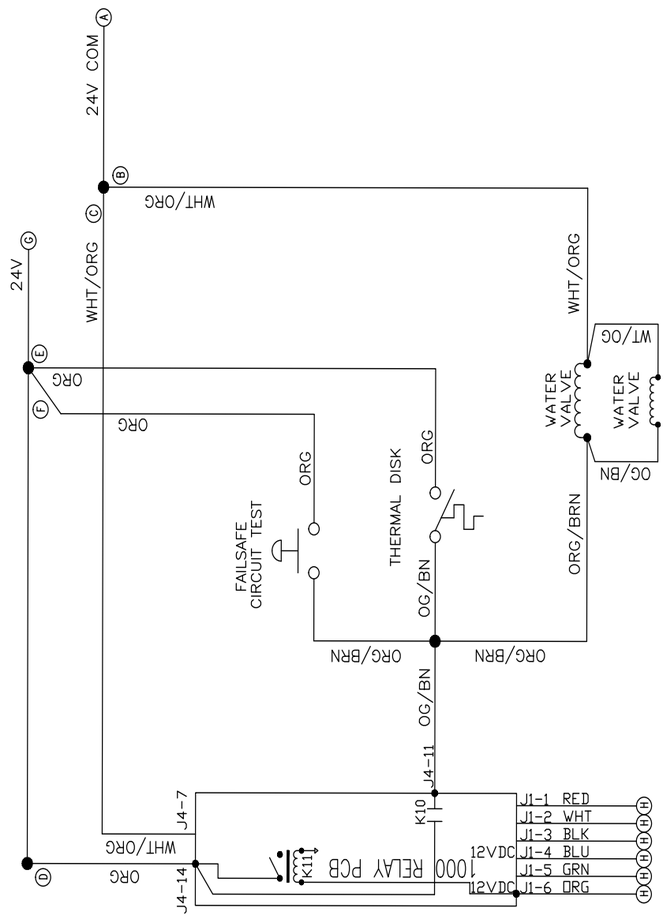

DN0120N_-11_O_B-_____-__X

SCHEMATIC

9508-020-001PR

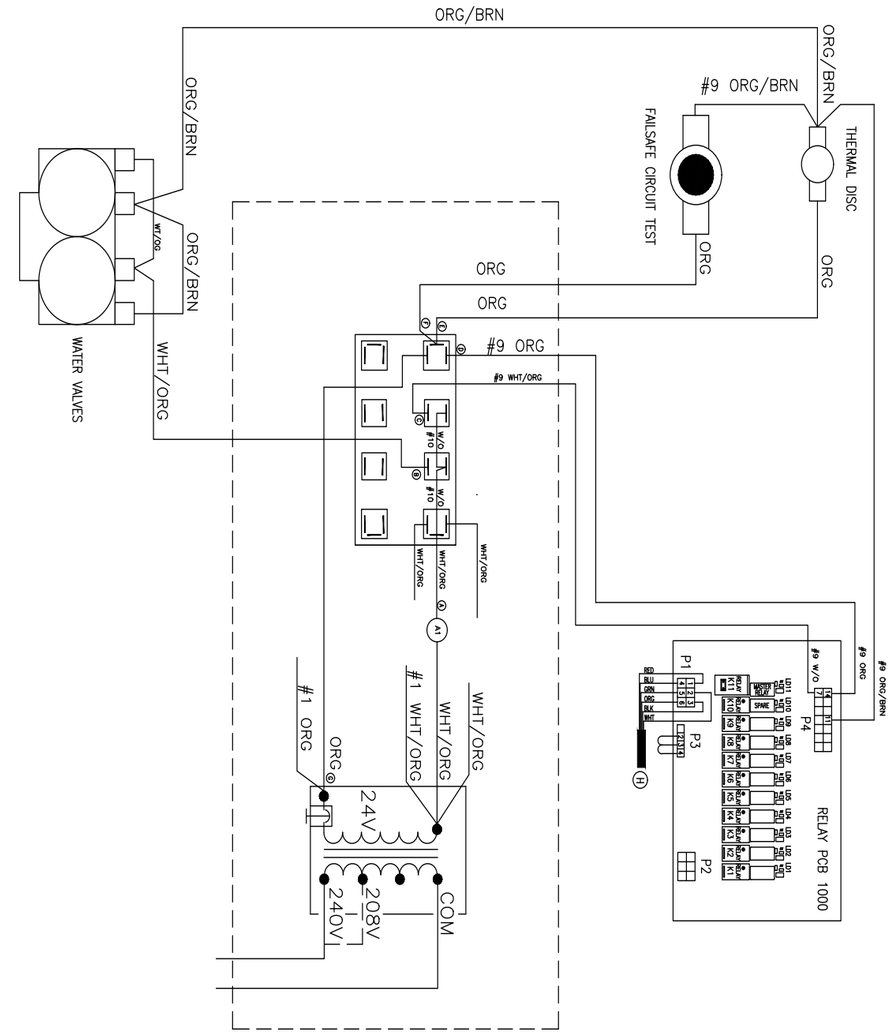

9507-020-001PR WIRING DIAGRAM DN0120N_-11_O_B-_____-__X

Wiring Schematic -11

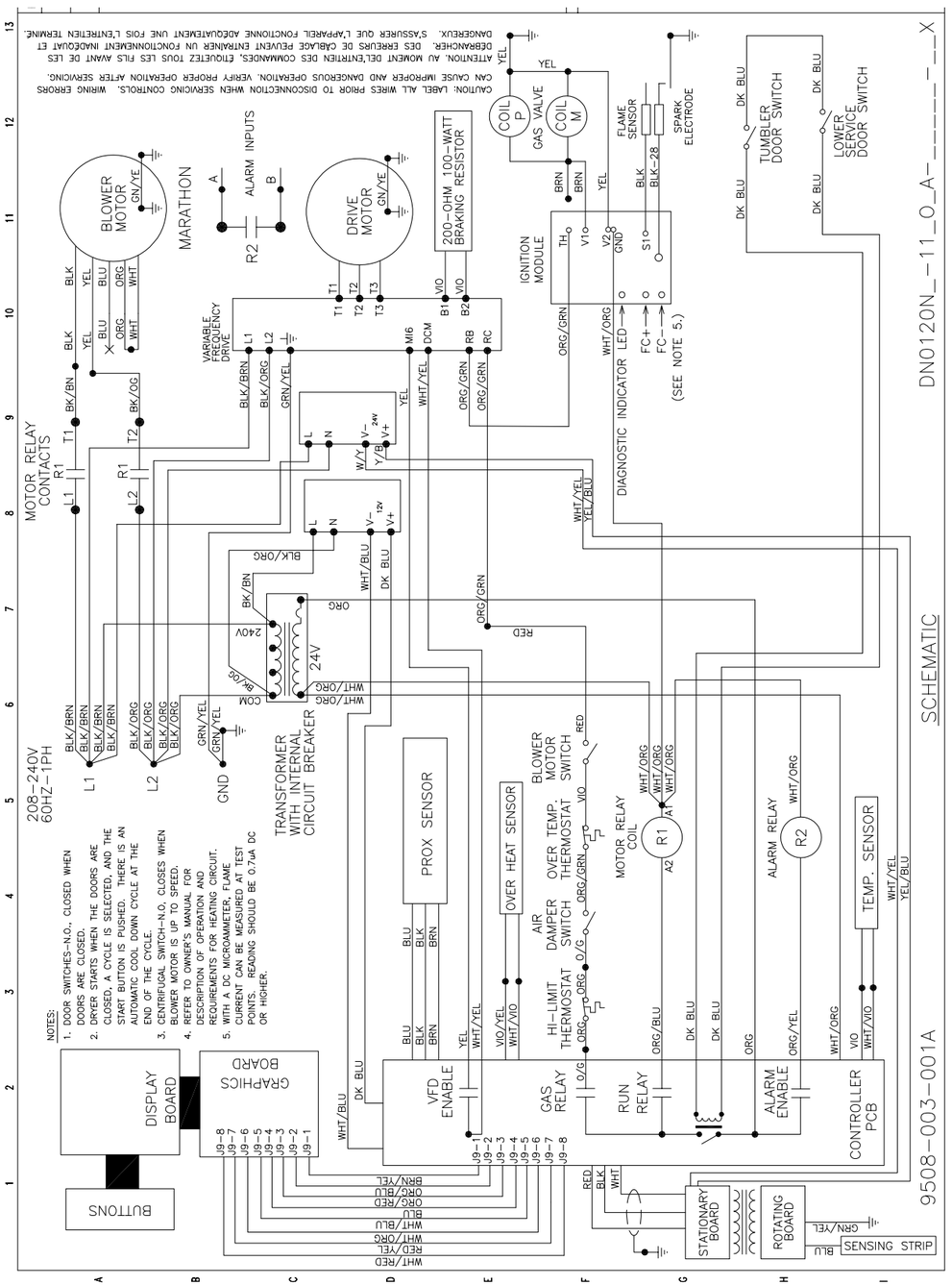

Wiring Diagram -11

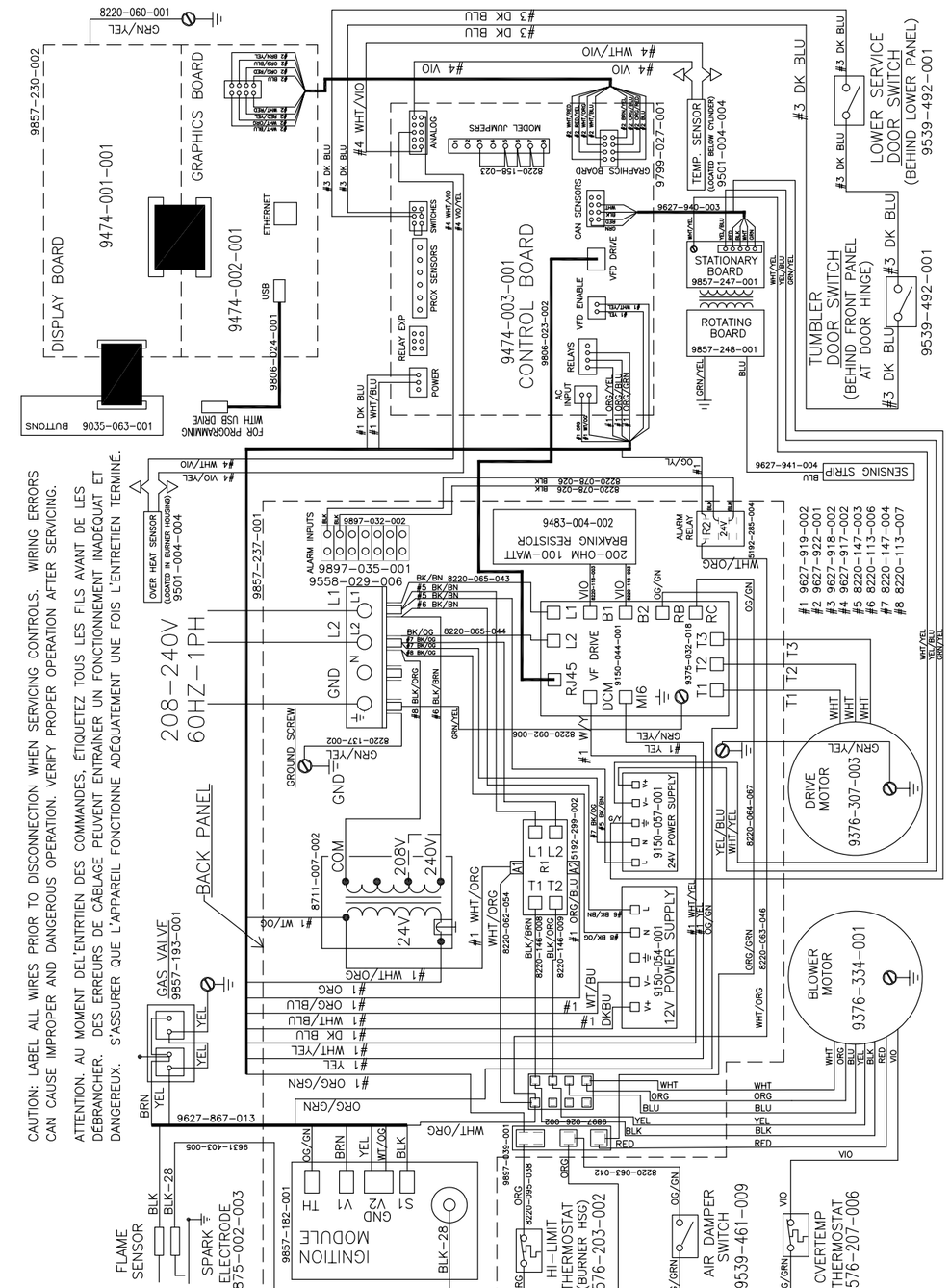

Wiring Schematic -10

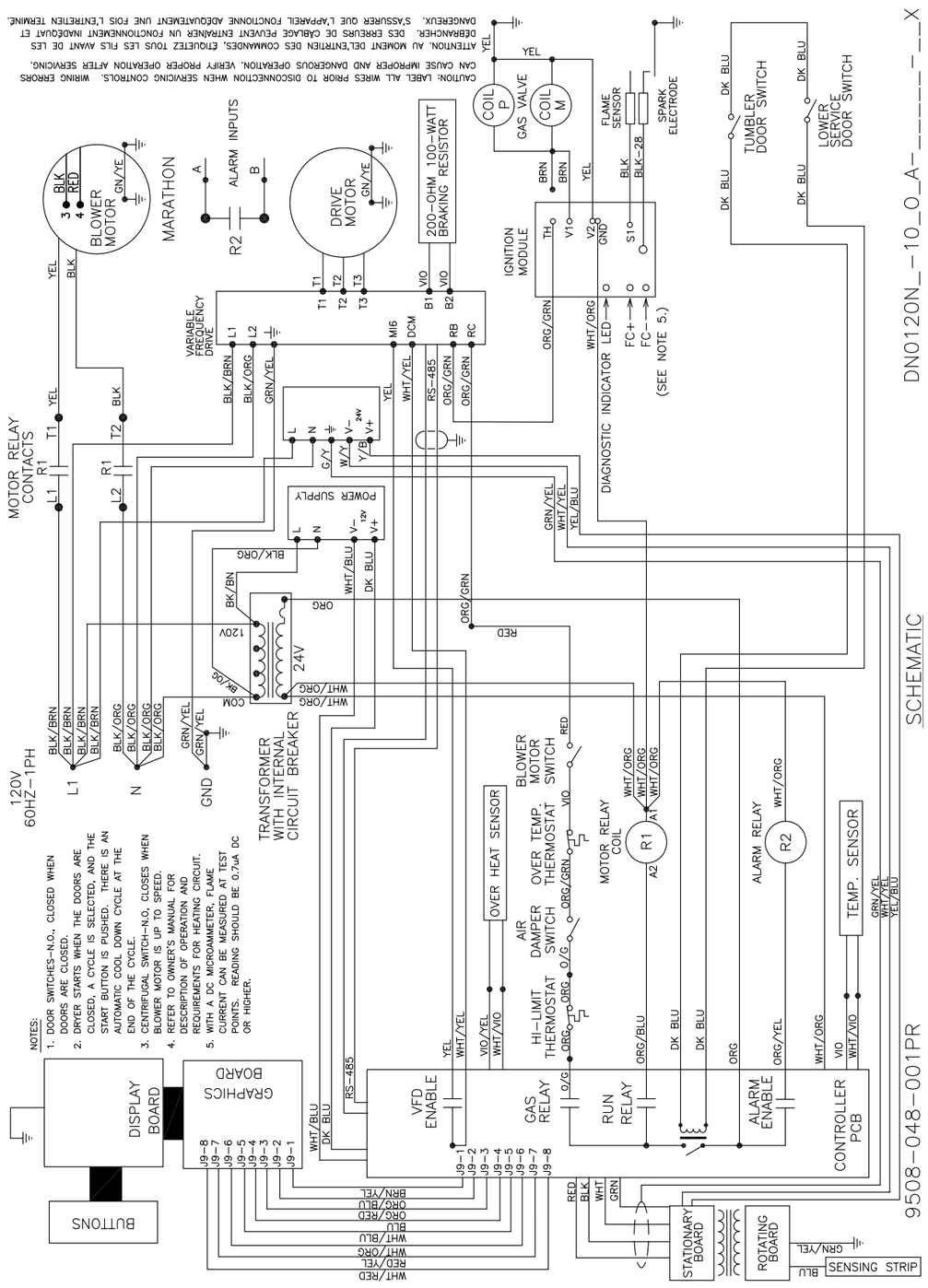

Wiring Diagram -10

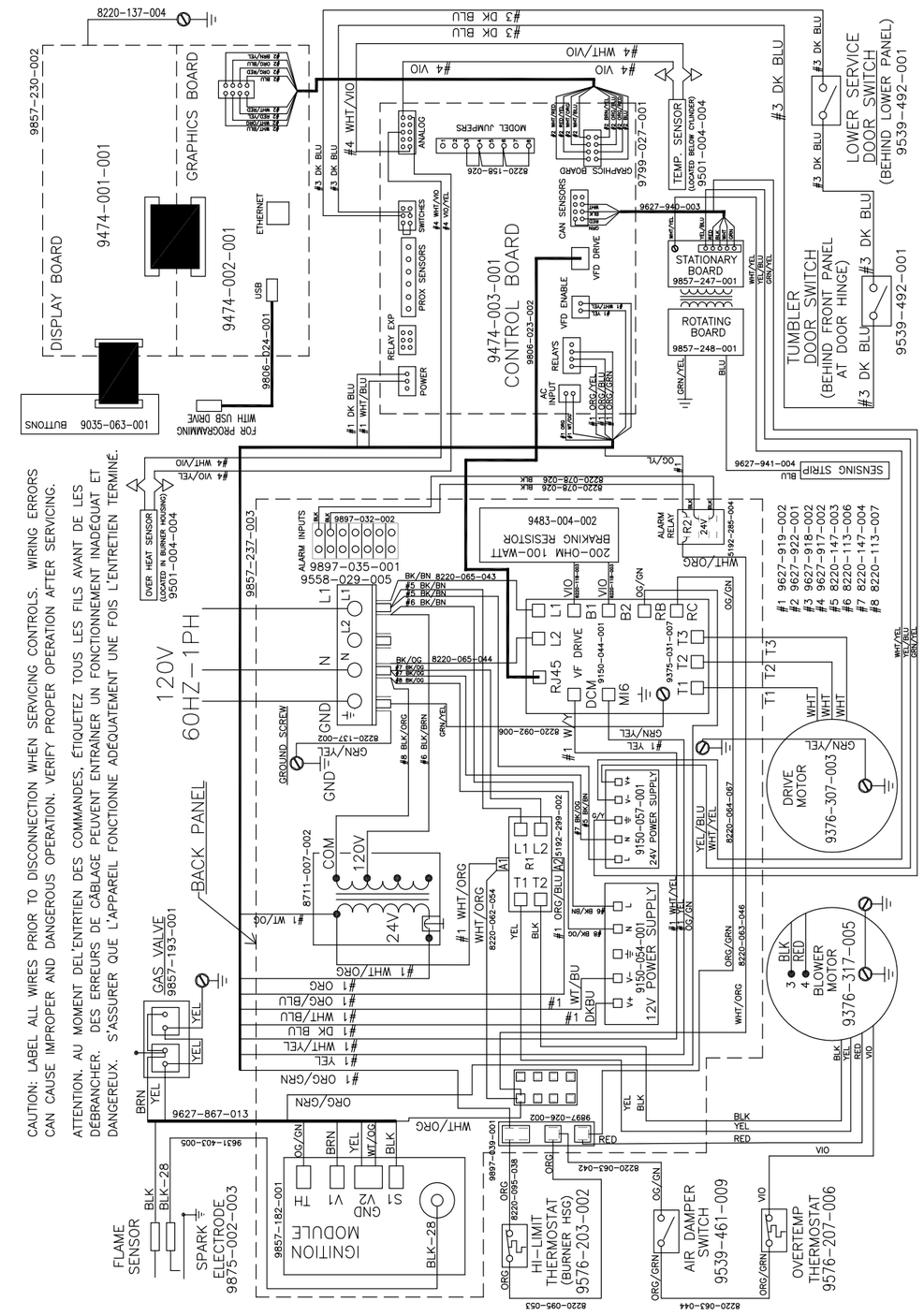

Notes

Section 6:

50Hz

Dryer Parts Data

DN0120NE-39AO1_

DN0120ND-39 50 HZ

Key	Description	T-120	QTY
*	Motor-Drive	9376-307-003	1
*	Pulley	9453-169-012	1
*	Motor-Blower	9376-334-001	1
*	Run Capacitor	5191-108-005	1
*	Start Capacitor	5191-109-005	1
*	Wiring Label-Schematic	9508-008-001	1
*	Wiring Label-Diagram	9507-008-001	1
*	Orifice Main Burner, #13	9425-069-028	4
*	Overlay-Trim Lower door	9435-057-001	1
*	Label- Warning/Notice	8502-763-001	1
*	Control Assembly	9857-237-002	1
*	Channel-Controls	9081-1914-001	1
*	Strip-Marker, Terminal	9558-029-004	1
*	Terminal Block Assy-Power, 4 Pole	9897-035-001	11
*	Screw, 5/16” #10B-3/8	9545-008-024	2
*	Wire Assy. Green/Yellow, 7”	8220-137-002	1
*	Transformer	8711-007-002	1
*	Screw 5/16” 10AB-3/8	9545-008-024	2
*	Relay-Motor, 30 Amp, 24V	5192-299-002	1
*	Screw, 5/16” 10AB-3/8	9545-008-024	2
*	Control Assy. Ignition	9857-182-001	1
*	Screw - 8B x 3/4	9545-045-007	2
*	Harness, Ignition Module	9627-867-013	1
*	Wire Assy. High Voltage lead	9631-403-005	1
*	Drive, Inverter	9375-032-018	1
*	Key Pad, Delat E-Drive	9150-044-001	1
*	Screw - #10B x 1/2	9545-008-026	4
*	Wire Assy. Green, 18”	8220-092-006	1
*	Relay, 24V	5192-285-004	1
*	Screw, 6B x 3/8	9545-031-003	4

Notes

Wiring Schematic -39

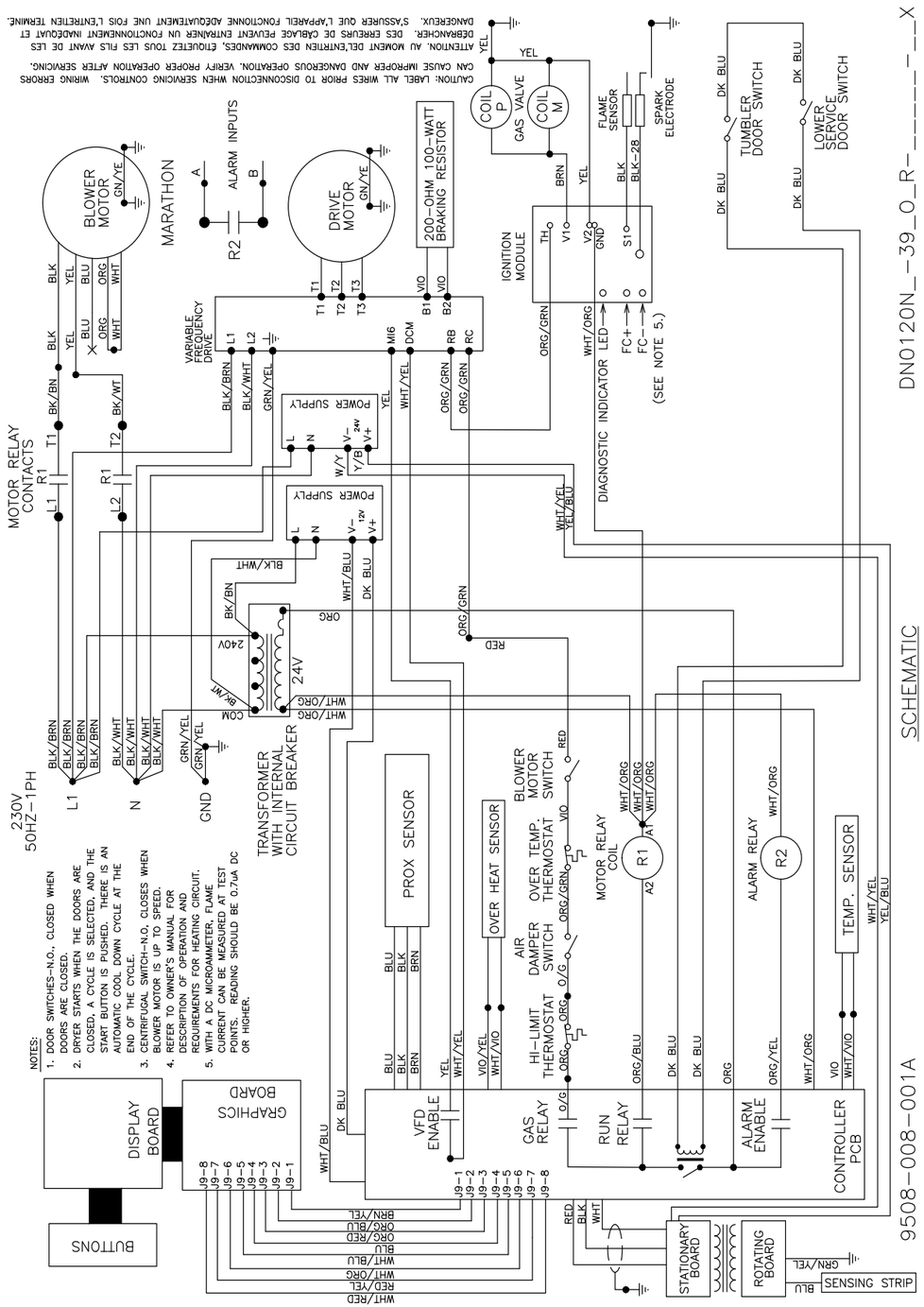
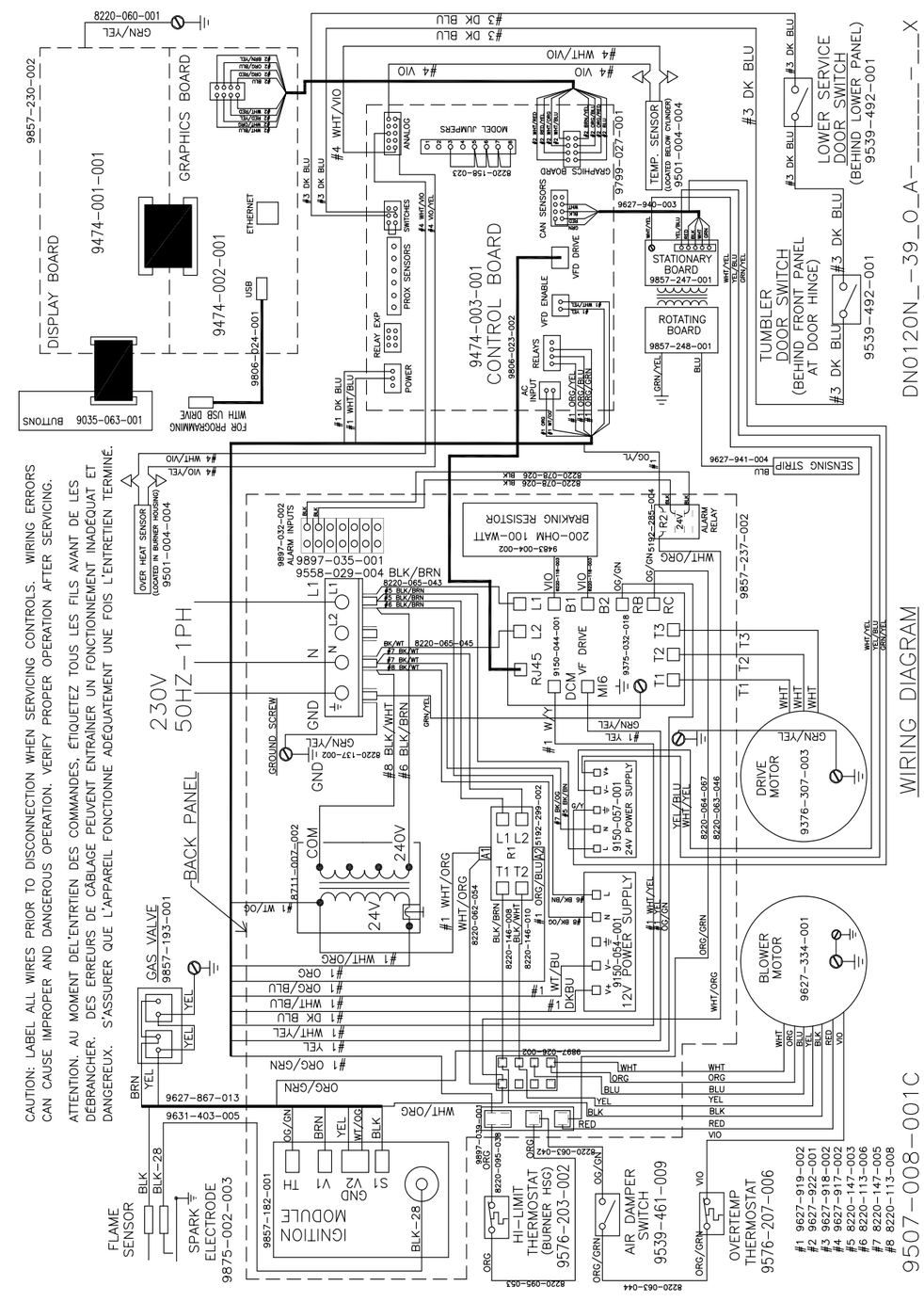
Wiring Diagram -39