T-750 SWD COMMERCIAL STACK WASHER/DRYER
MOUNTING DIMENSIONS

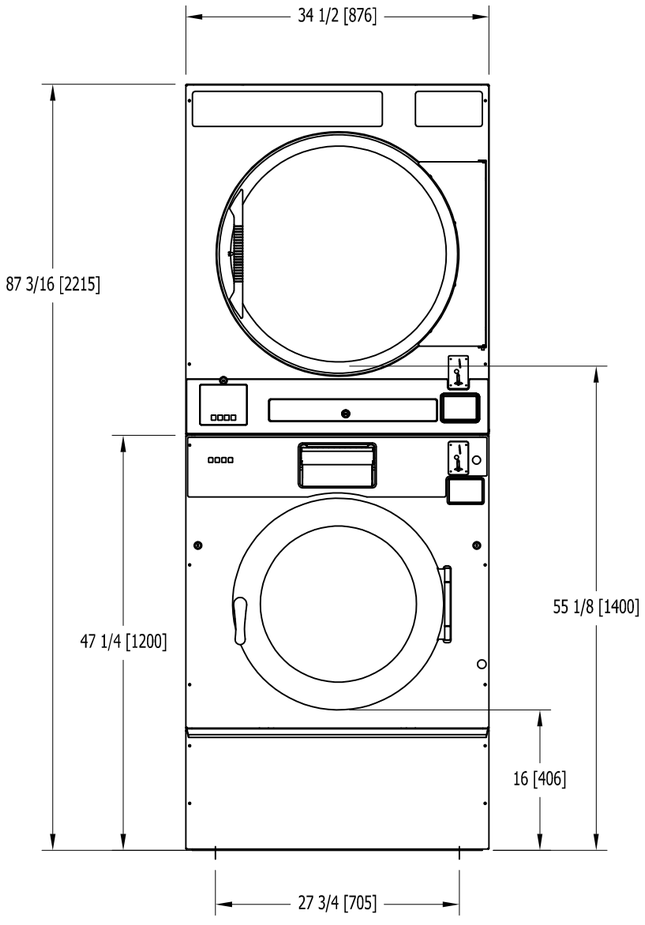

FRONT

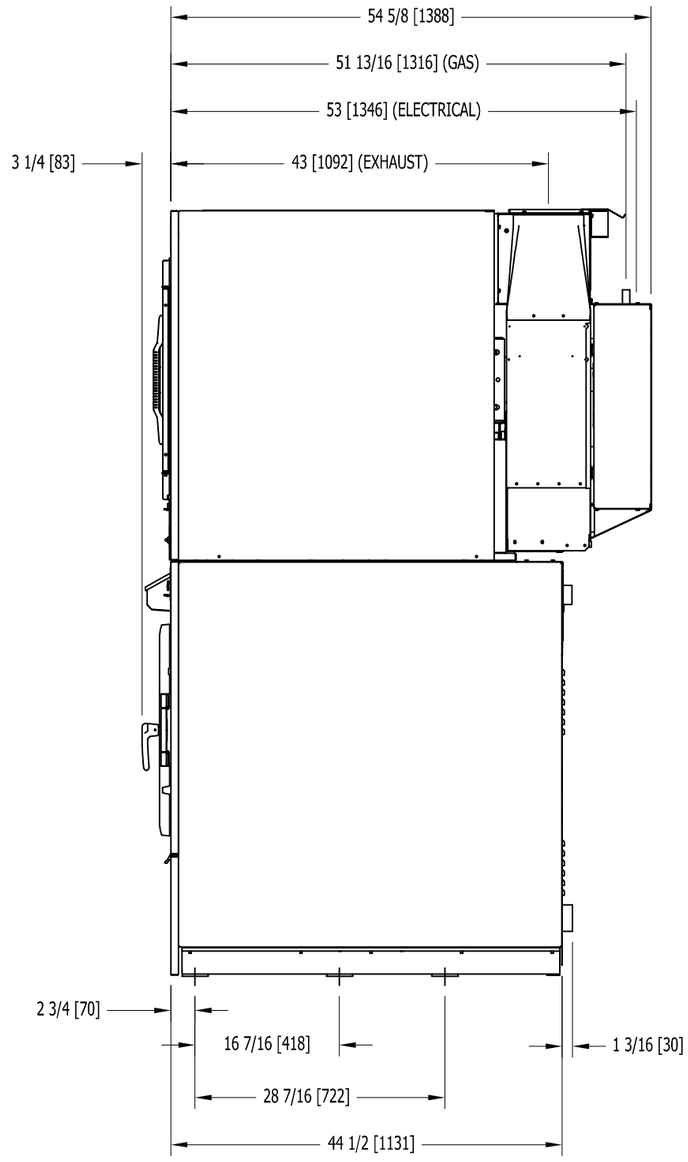

SIDE

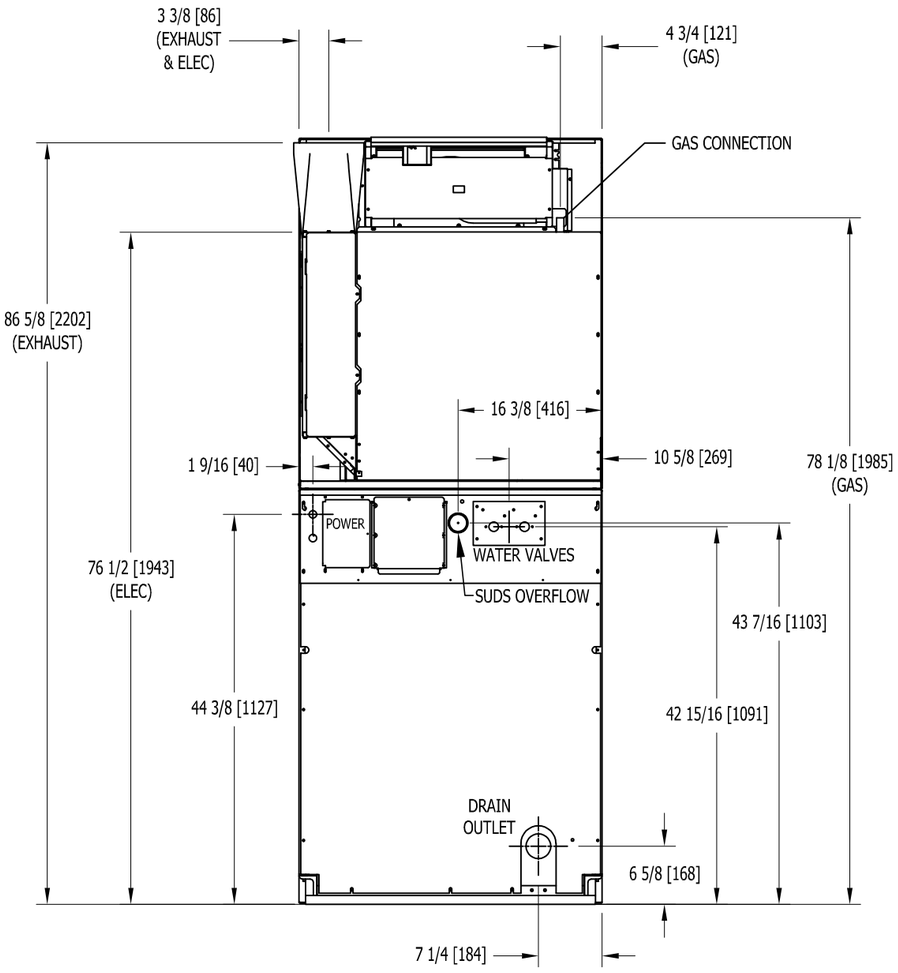

BACK